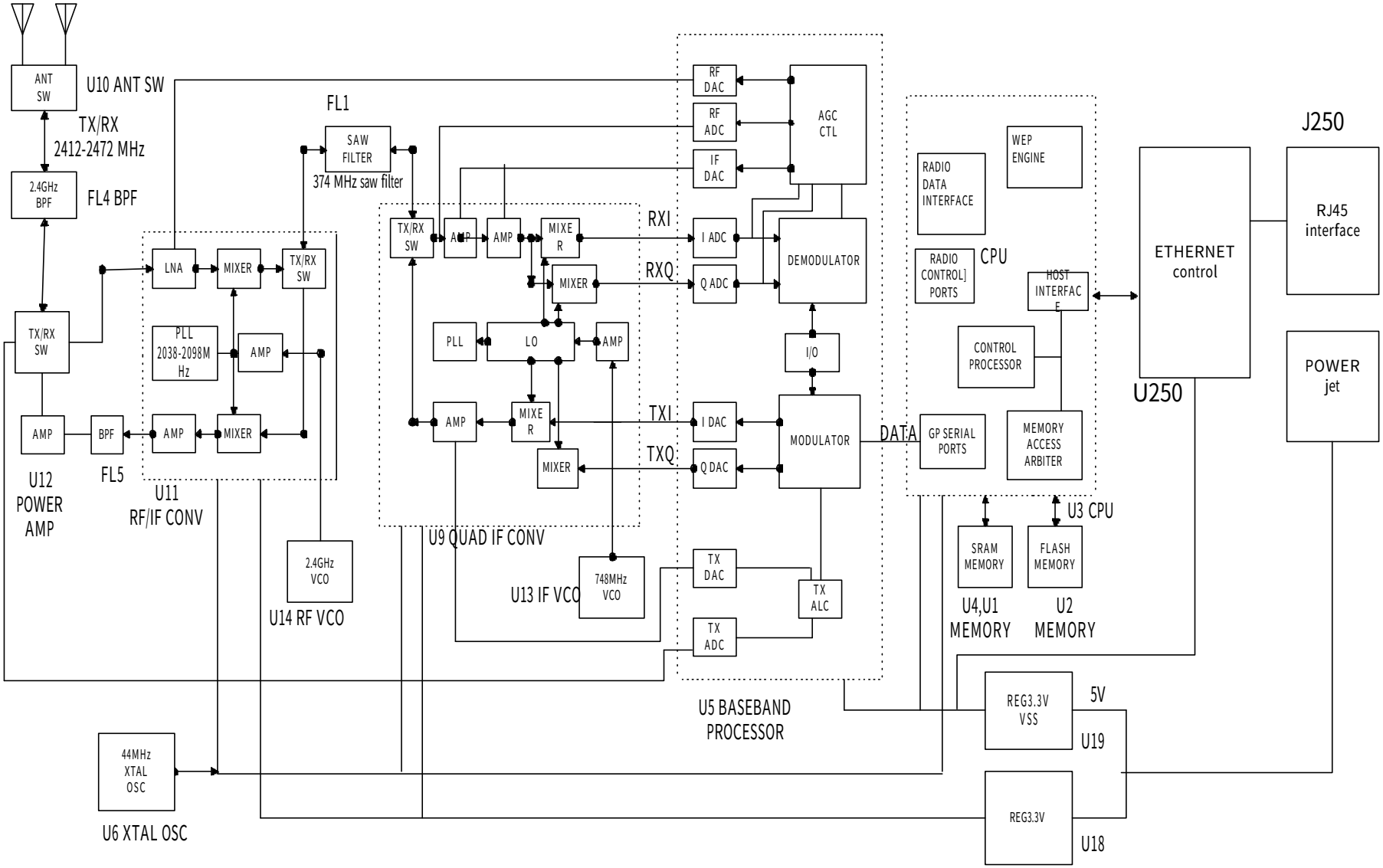
ANT SW
U10 ANT SW
TX/RX
2412-2472 MHz
2.4GHz BPF
FL4 BPF
TX/RX SW
AMP
BPF
U12 POWER AMP
FL5
LNA
MIXER
TX/RX SW
PLL 2038-2098MHz
AMP
AMP
MIXER
U11 RF/IF CONV
FL1
SAW FILTER
374 MHz saw filter
2.4GHz VCO
U14 RF VCO
TX/RX SW
AMP
AMP
MIXER
MIXER
PLL
LO
AMP
AMP
MIXER
MIXER
U9 QUAD IF CONV
748MHz VCO
U13 IF VCO
RXI
RXQ
TXI
TXQ
RF DAC
RF ADC
IF DAC
AGC CTL
I ADC
Q ADC
DEMODULATOR
I/O
I DAC
Q DAC
MODULATOR
DATA
TX DAC
TX ADC
TX ALC
U5 BASEBAND PROCESSOR
RADIO DATA INTERFACE
WEP ENGINE
RADIO CONTROL] PORTS
CPU
HOST INTERFACE
CONTROL PROCESSOR
GP SERIAL PORTS
MEMORY ACCESS ARBITER
U3 CPU
SRAM MEMORY
FLASH MEMORY
U4,U1 MEMORY
U2 MEMORY
ETHERNET control
U250
J250
RJ45 interface
POWER jet
REG3.3V VSS
5V
U19
REG3.3V
U18
44MHz XTAL OSC
U6 XTAL OSC