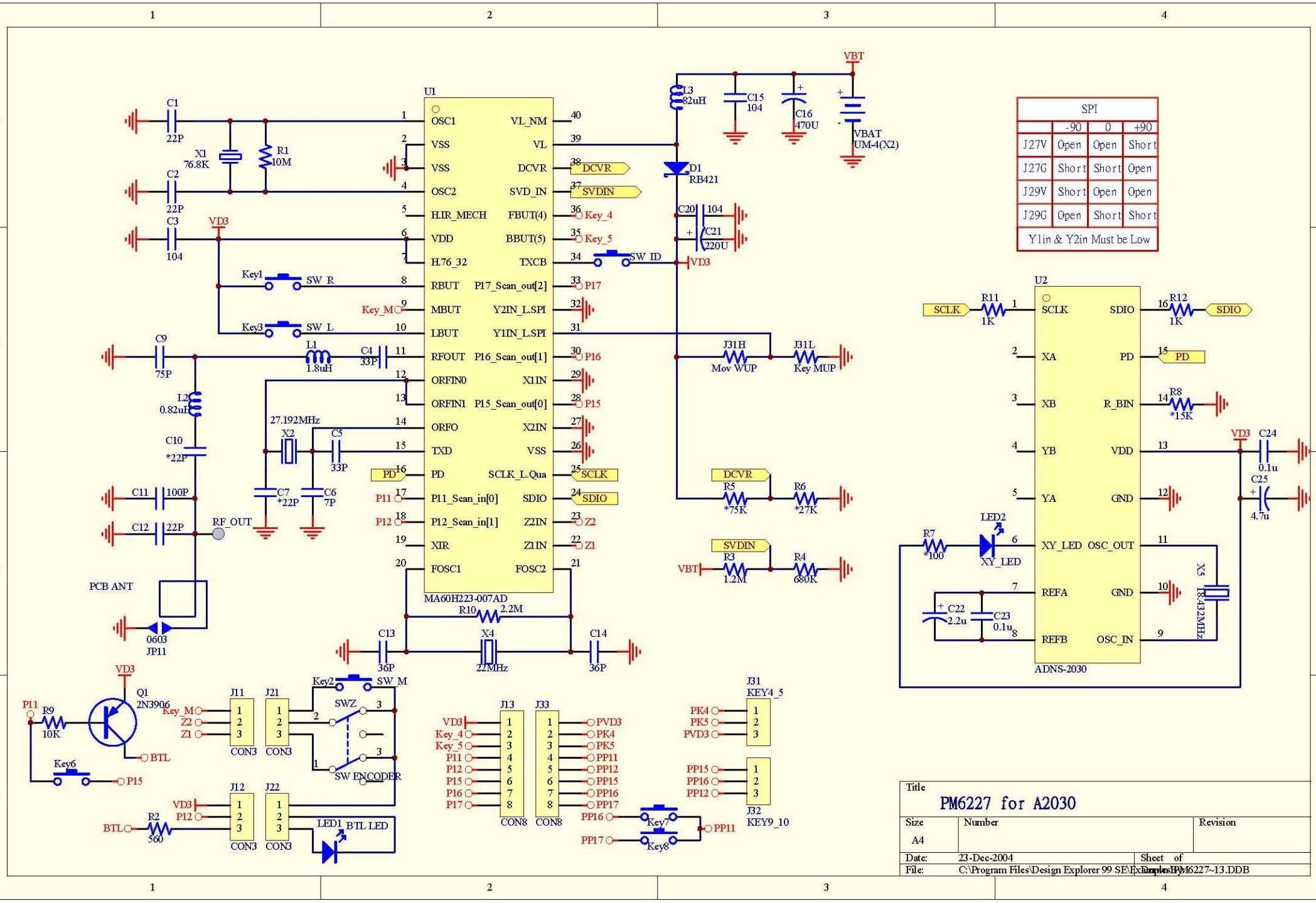

SPI			
	-90	0	+90
J27V	Open	Open	Short
J27G	Short	Short	Open
J29V	Short	Open	Open
J29G	Open	Short	Short
Y1in & Y2in Must be Low			

Title: PM6227 for A2030		
Size: A4	Number	Revision
Date: 23-Dec-2004	Sheet of	
File: C:\Program Files\Design Explorer 99 SE\Examples\PM6227~13.DDB		