Annex A. Plots of System Verification

The plots for system verification are shown as follows

Plots of System Verification

Test Laboratory: Bureau Veritas ADT SAR/HAC Testing Lab Date: 2022/02/22

S01 System Check_H2450_220222

DUT: Dipole 2450 MHz; Type: D2450V2; SN: 737

Communication System: UID 0, CW; Frequency: 2450 MHz;Duty Cycle: 1:1
Medium: H19T27N1_0222 Medium parameters used: f = 2450 MHz; σ = 1.794 S/m; ε_r = 37.894; ρ = 1000 kg/m^3
Ambient Temperature：23.4 ℃ ； Liquid Temperature：23.1 ℃

DASY5 Configuration:
- Probe: EX3DV4 - SN3650; ConvF(7.77, 7.77, 7.77) @ 2450 MHz; Calibrated: 2021/3/26
- Sensor-Surface: 1.4mm (Mechanical Surface Detection)
- Electronics: DAE4 Sn861; Calibrated: 2021/4/14
- Phantom: ELI Phantom_1204; Type: QD OVA 002 Ax;
- Measurement SW: DASY52, Version 52.10 (4); SEMCAD X Version 14.6.14 (7501)

Pin=50mW/Area Scan (81x81x1): Interpolated grid: dx=1.200 mm, dy=1.200 mm
Maximum value of SAR (interpolated) = 4.02 W/kg

Pin=50mW/Zoom Scan (7x7x7)/Cube 0: Measurement grid: dx=5mm, dy=5mm, dz=5mm
Reference Value = 47.70 V/m; Power Drift = 0.06 dB
Peak SAR (extrapolated) = 5.03 W/kg
SAR(1 g) = 2.42 W/kg; SAR(10 g) = 1.13 W/kg (SAR corrected for target medium)
Maximum value of SAR (measured) = 4.06 W/kg

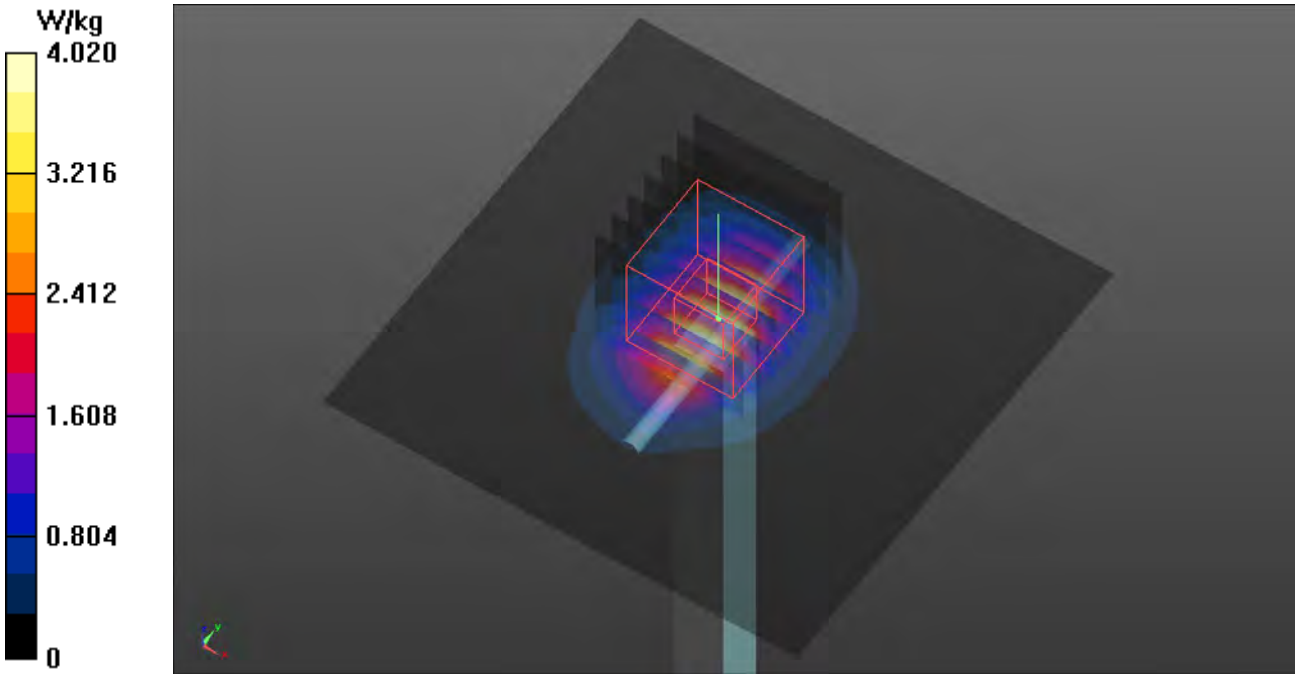

Plots of System Verification

Test Laboratory: Bureau Veritas ADT SAR/HAC Testing Lab Date: 2022/02/22

S02 System Check_H5250_220222

DUT: Dipole 5 GHz; Type: D5GHzV2; SN: 1019

Communication System: UID 0, CW; Frequency: 5250 MHz;Duty Cycle: 1:1
Medium: H34T60N1_0222 Medium parameters used (interpolated): f = 5250 MHz; σ = 4.76 S/m; ε_r = 35.003; ρ = 1000 kg/m^3
Ambient Temperature：23.4 ℃ ； Liquid Temperature：23.1 ℃

DASY5 Configuration:
- Probe: EX3DV4 - SN3650; ConvF(5.29, 5.29, 5.29) @ 5250 MHz; Calibrated: 2021/3/26
- Sensor-Surface: 1.4mm (Mechanical Surface Detection)
- Electronics: DAE4 Sn861; Calibrated: 2021/4/14
- Phantom: ELI Phantom_1204; Type: QD OVA 002 Ax;
- Measurement SW: DASY52, Version 52.10 (4); SEMCAD X Version 14.6.14 (7501)

Pin=50mW/Area Scan (91x91x1): Interpolated grid: dx=1.000 mm, dy=1.000 mm
Maximum value of SAR (interpolated) = 9.02 W/kg

Pin=50mW/Zoom Scan (7x7x7)/Cube 0: Measurement grid: dx=4mm, dy=4mm, dz=1.4mm
Reference Value = 48.98 V/m; Power Drift = 0.00 dB
Peak SAR (extrapolated) = 15.2 W/kg
SAR(1 g) = 3.8 W/kg; SAR(10 g) = 1.09 W/kg (SAR corrected for target medium)
Maximum value of SAR (measured) = 9.59 W/kg

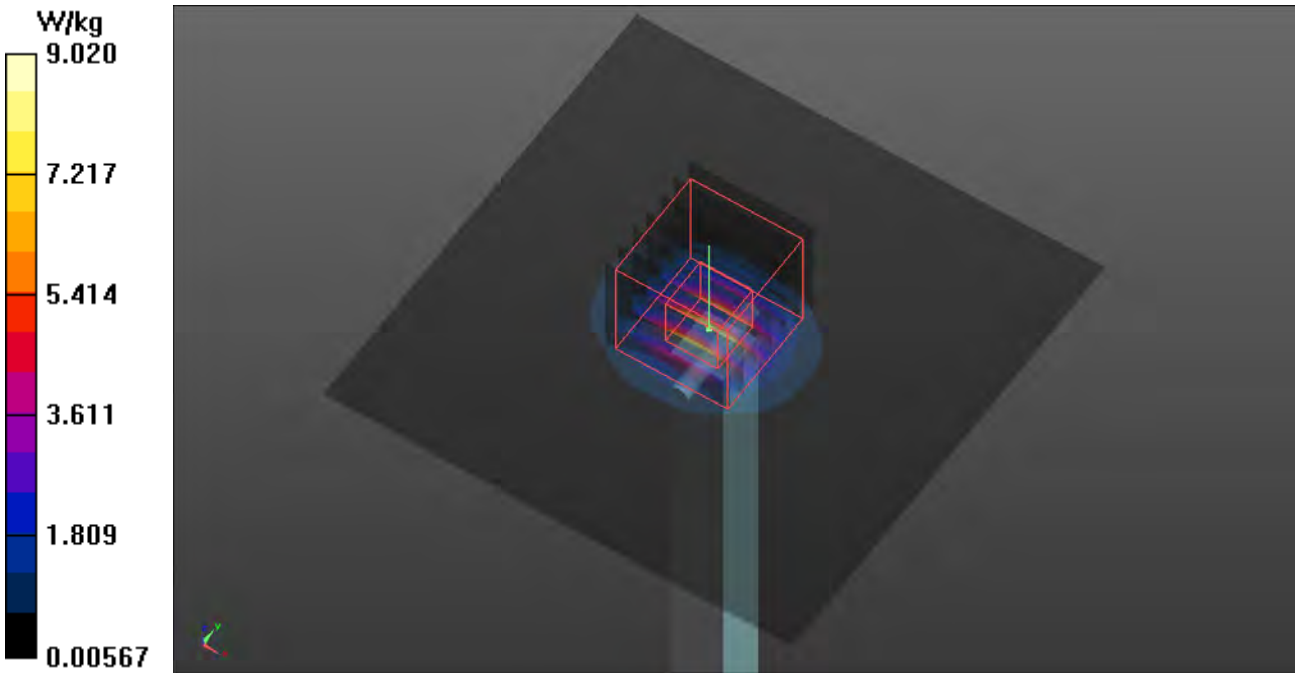

Plots of System Verification

Test Laboratory: Bureau Veritas ADT SAR/HAC Testing Lab Date: 2022/02/22

S03 System Check_H5600_220222

DUT: Dipole 5 GHz; Type: D5GHzV2; SN: 1019

Communication System: UID 0, CW; Frequency: 5600 MHz;Duty Cycle: 1:1
Medium: H34T60N1_0222 Medium parameters used: f = 5600 MHz; σ = 5.128 S/m; ε_r = 34.518; ρ = 1000 kg/m^3
Ambient Temperature：23.4 ℃ ； Liquid Temperature：23.1 ℃

DASY5 Configuration:
- Probe: EX3DV4 - SN3650; ConvF(4.8, 4.8, 4.8) @ 5600 MHz; Calibrated: 2021/3/26
- Sensor-Surface: 1.4mm (Mechanical Surface Detection)
- Electronics: DAE4 Sn861; Calibrated: 2021/4/14
- Phantom: ELI Phantom_1204; Type: QD OVA 002 Ax;
- Measurement SW: DASY52, Version 52.10 (4); SEMCAD X Version 14.6.14 (7501)

Pin=50mW/Area Scan (91x91x1): Interpolated grid: dx=1.000 mm, dy=1.000 mm
Maximum value of SAR (interpolated) = 10.2 W/kg

Pin=50mW/Zoom Scan (7x7x7)/Cube 0: Measurement grid: dx=4mm, dy=4mm, dz=1.4mm
Reference Value = 45.89 V/m; Power Drift = 0.06 dB
Peak SAR (extrapolated) = 17.7 W/kg
SAR(1 g) = 4.08 W/kg; SAR(10 g) = 1.16 W/kg (SAR corrected for target medium)
Maximum value of SAR (measured) = 10.5 W/kg

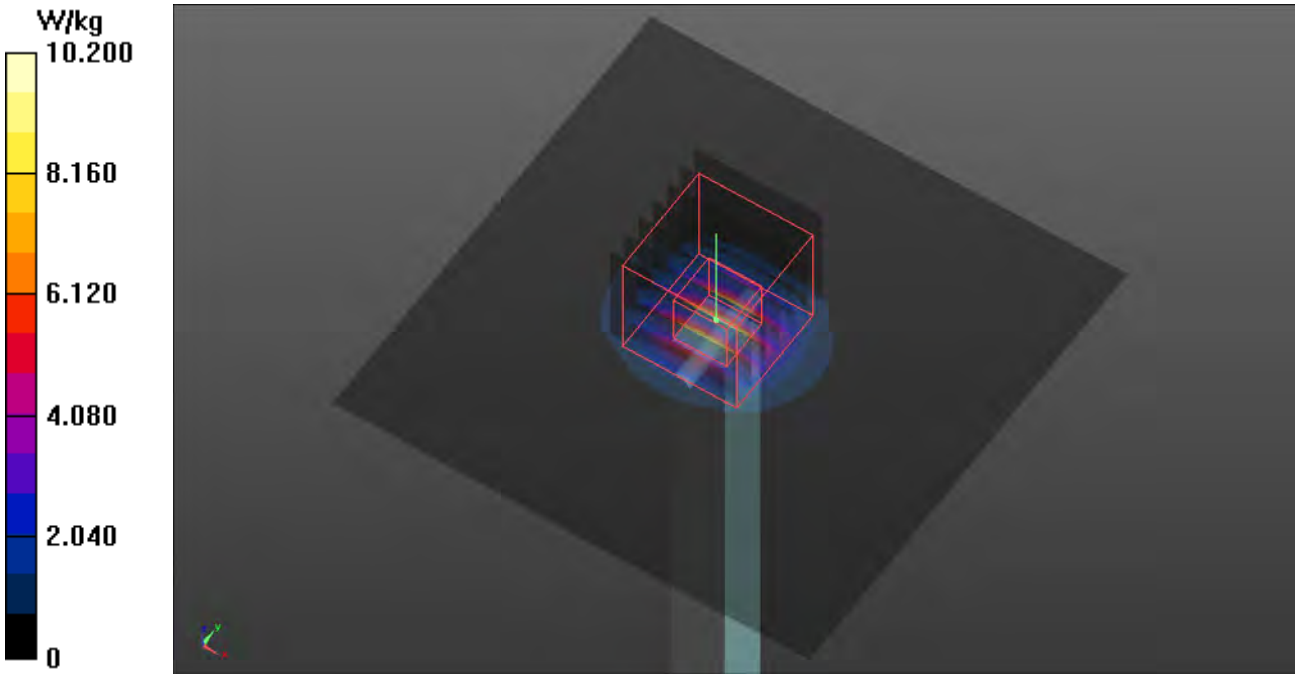

Plots of System Verification

Test Laboratory: Bureau Veritas ADT SAR/HAC Testing Lab Date: 2022/02/22

S04 System Check_H5750_220222

DUT: Dipole 5 GHz; Type: D5GHzV2; SN: 1019

Communication System: UID 0, CW; Frequency: 5750 MHz;Duty Cycle: 1:1
Medium: H34T60N1_0222 Medium parameters used: f = 5750 MHz; σ = 5.275 S/m; ε_r = 34.361; ρ = 1000 kg/m^3
Ambient Temperature：23.4 ℃ ； Liquid Temperature：23.1 ℃

DASY5 Configuration:
- Probe: EX3DV4 - SN3650; ConvF(5.1, 5.1, 5.1) @ 5750 MHz; Calibrated: 2021/3/26
- Sensor-Surface: 1.4mm (Mechanical Surface Detection)
- Electronics: DAE4 Sn861; Calibrated: 2021/4/14
- Phantom: ELI Phantom_1204; Type: QD OVA 002 Ax;
- Measurement SW: DASY52, Version 52.10 (4); SEMCAD X Version 14.6.14 (7501)

Pin=50mW/Area Scan (91x91x1): Interpolated grid: dx=1.000 mm, dy=1.000 mm
Maximum value of SAR (interpolated) = 8.99 W/kg

Pin=50mW/Zoom Scan (7x7x7)/Cube 0: Measurement grid: dx=4mm, dy=4mm, dz=1.4mm
Reference Value = 41.35 V/m; Power Drift = 0.06 dB
Peak SAR (extrapolated) = 16.0 W/kg
SAR(1 g) = 3.63 W/kg; SAR(10 g) = 0.999 W/kg (SAR corrected for target medium)
Maximum value of SAR (measured) = 9.27 W/kg

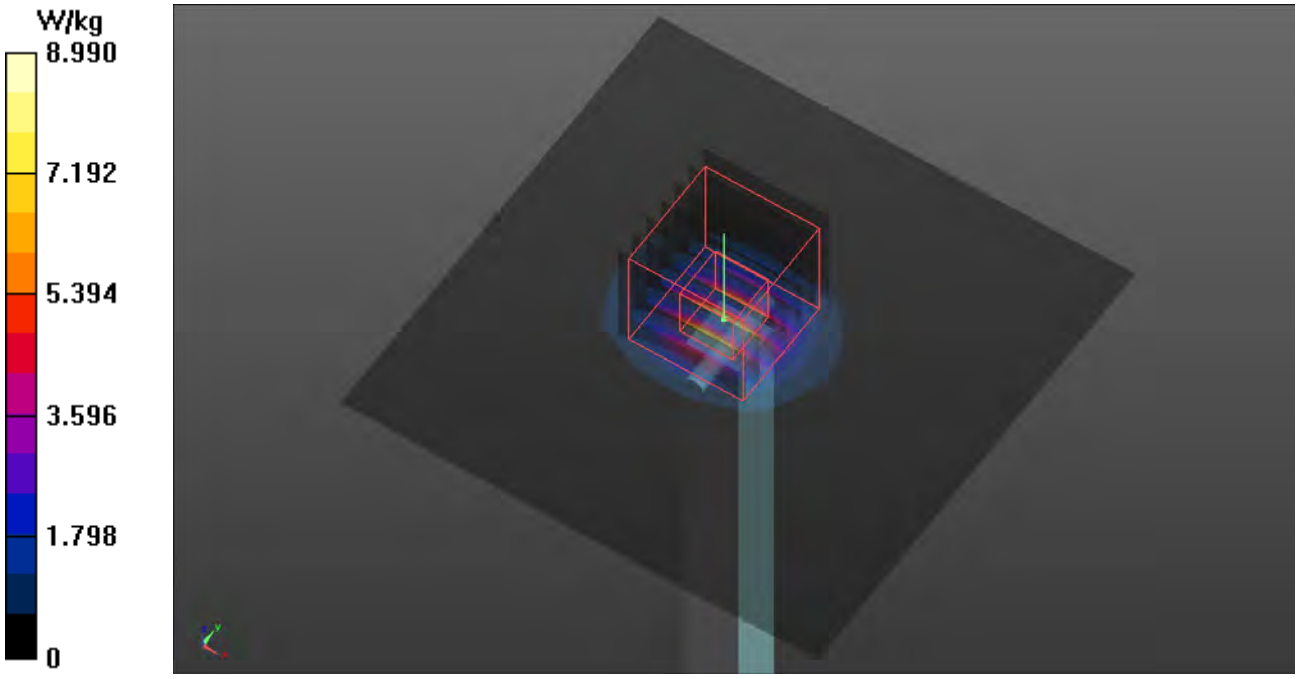

Plots of System Verification

Test Laboratory: Bureau Veritas ADT SAR/HAC Testing Lab Date: 2022/02/22

S05 System Check_H2450_220222

DUT: Dipole 2450 MHz; Type: D2450V2; SN: 737

Communication System: UID 0, CW; Frequency: 2450 MHz;Duty Cycle: 1:1
Medium: H19T27N1_0222 Medium parameters used: f = 2450 MHz; σ = 1.794 S/m; ε_r = 37.894; ρ = 1000 kg/m^3
Ambient Temperature：23.4 ℃ ； Liquid Temperature：23.1 ℃

DASY5 Configuration:
- Probe: EX3DV4 - SN3650; ConvF(7.77, 7.77, 7.77) @ 2450 MHz; Calibrated: 2021/3/26
- Sensor-Surface: 1.4mm (Mechanical Surface Detection)
- Electronics: DAE4 Sn861; Calibrated: 2021/4/14
- Phantom: ELI Phantom_1204; Type: QD OVA 002 Ax;
- Measurement SW: DASY52, Version 52.10 (4); SEMCAD X Version 14.6.14 (7501)

Pin=50mW/Area Scan (81x81x1): Interpolated grid: dx=1.200 mm, dy=1.200 mm
Maximum value of SAR (interpolated) = 4.02 W/kg

Pin=50mW/Zoom Scan (7x7x7)/Cube 0: Measurement grid: dx=5mm, dy=5mm, dz=5mm
Reference Value = 47.70 V/m; Power Drift = 0.06 dB
Peak SAR (extrapolated) = 5.03 W/kg
SAR(1 g) = 2.42 W/kg; SAR(10 g) = 1.13 W/kg (SAR corrected for target medium)
Maximum value of SAR (measured) = 4.06 W/kg

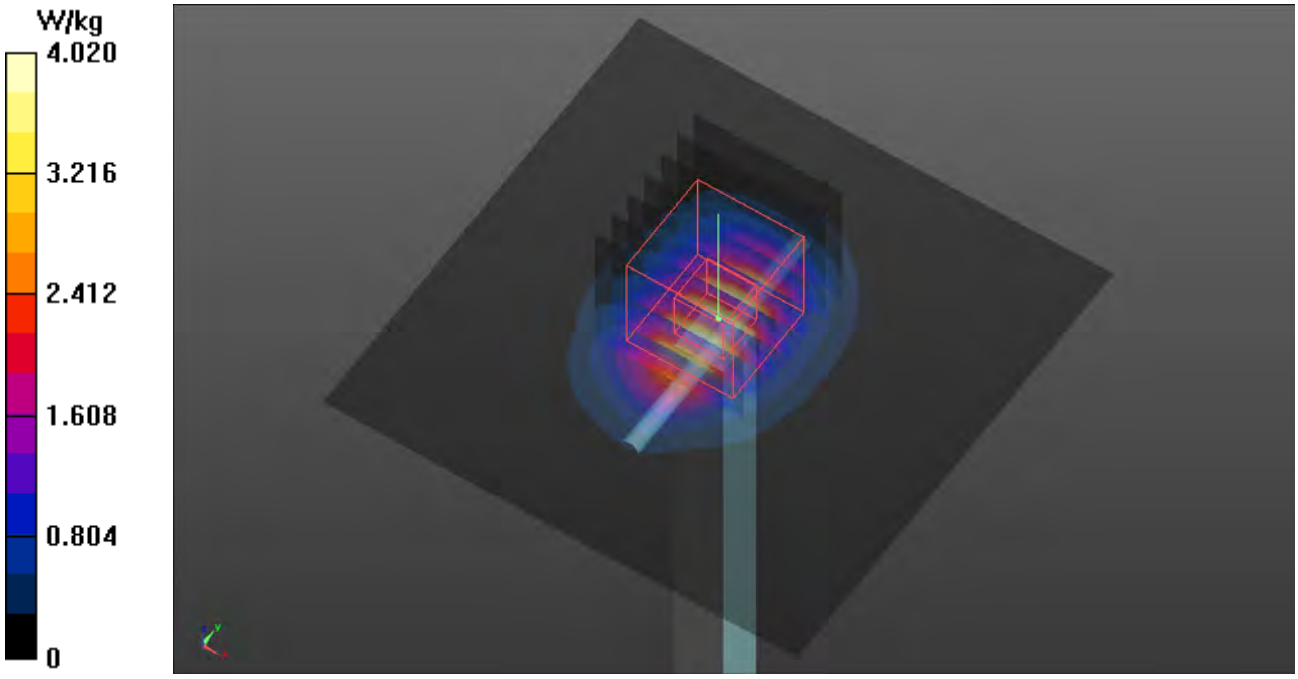

Test Lab: Bureau Veritas ADT SAR/HAC/PD Testing Lab

Measurement Report

S06 System Check_H6500_220222

Device under Test Properties

Model, Manufacturer	Dimensions [mm]	IMEI	DUT Type
Dipole,	50.0 x 10.0 x 8.0		6500

Exposure Conditions

Phantom Section, TSL	Position, Test Distance [mm]	Band	Group, UID	Frequency [MHz], Channel Number	Conversion Factor	TSL Conductivity [S/m]	TSL Permittivity
Flat, HSL	,		,	6500.0,	5.7	6.19	33.7

Hardware Setup

Phantom	TSL, Measured Date	Probe, Calibration Date	DAE, Calibration Date
ELI V8.0 (20deg probe tilt) - 1204	H50T72N1, 2022-Feb-22	EX3DV4 - SN3650, 2021-03-26	DAE4 Sn861, 2021-04-14

Scan Setup

	Area Scan	Zoom Scan
Grid Extents [mm]	45.0 x 90.0	22.0 x 22.0 x 22.0
Grid Steps [mm]	7.5 x 7.5	3.4 x 3.4 x 1.4
Sensor Surface [mm]	3.0	1.4

Measurement Results

	Area Scan	Zoom Scan
Date	2022-02-22	2022-02-22
psSAR1g [W/kg]	24.3	28.4
psSAR10g [W/kg]	4.79	5.20
Power Drift [dB]	0.00	-0.02

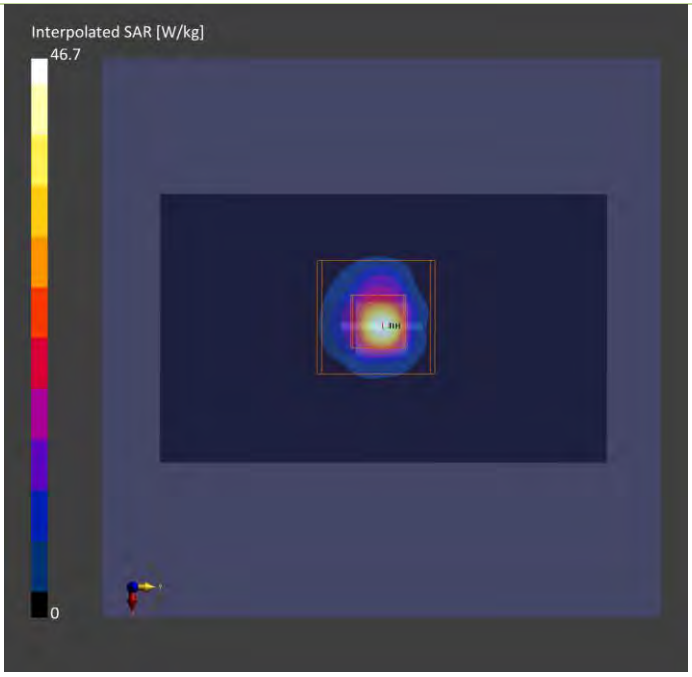

Plots of System Verification

Test Lab: Bureau Veritas ADT SAR/HAC/PD Testing Lab

Power Density Plot No.:

P06 PD_System Check_10 GHz_220223

Device under Test Properties

Name, Manufacturer	Dimensions [mm]	IMEI	DUT Type
SPEAG, 5G Verification Source 10 GHz	100.0 x 100.0 x 170.0	SN: 1025	

Exposure Conditions

Phantom Section	Position, Test Distance [mm]	Band	Group, UID	Frequency [MHz], Channel Number	Conversion Factor
5GAir	FRONT 5.55	Validation band	CW	10000.0	1.0

Hardware Setup

Phantom	Medium	Probe, Calibration Date	DAE, Calibration Date
mmWave	Air---	EUmmWV4 - SN9438_F1-55GHz, 2021-07-26	DAE4 Sn1698, 2021-11-09

Scan Setup

	5G Scan
Grid Extents [mm]	120.0 x 120.0
Grid Steps [lambda]	0.25 x 0.25
Sensor Surface [mm]	5.55

Measurement Results

	5G Scan
Date	2022-02-23
Avg. Area [cm²]	4.00
$pS_{tot}avg$[W/m²]	49.2
$pS_n avg$ [W/m²]	49.1
E_{peak} [V/m]	142
Power Drift [dB]	-0.01

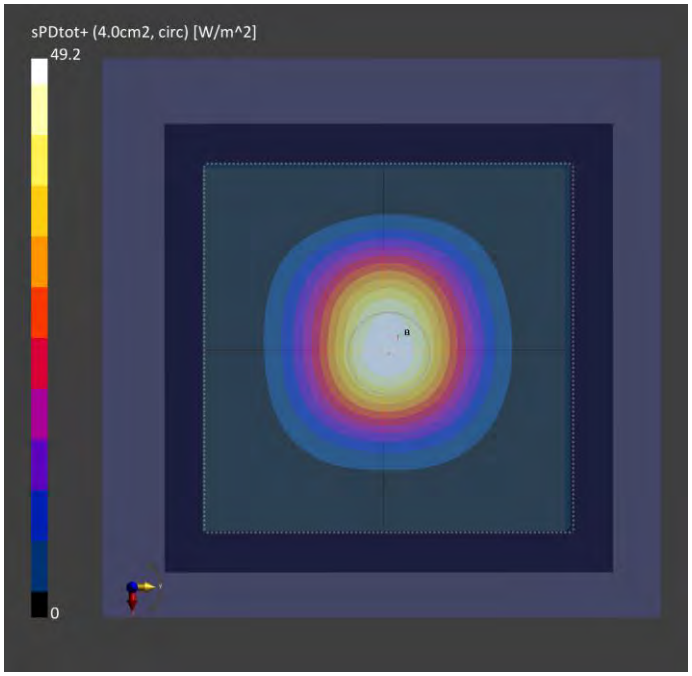

Annex B. Plots of Measurement

The SAR plots for highest measured SAR in each exposure configuration, wireless mode and frequency band combination are shown as follows

Plots of System Verification

Test Laboratory: Bureau Veritas ADT SAR/HAC Testing Lab Date: 2022/2/22

P01 WLAN2.4G_802.11n HT20_Lid Closed Mode_0mm_Ch6_Ant 0+1

DUT: BFLF-WTW-P21123601

Communication System: UID 10591 - AAC, IEEE 802.11n (HT Mixed, 20MHz, MCS0); Frequency: 2437 MHz;Duty Cycle: 1:1.01
Medium: H19T27N1_0222 Medium parameters used (interpolated): f = 2437 MHz; σ = 1.785 S/m; ε_r = 37.908; ρ = 1000 kg/m^3
Ambient Temperature：23.4 ℃ ； Liquid Temperature：23.1 ℃

DASY5 Configuration:
- Probe: EX3DV4 - SN3650; ConvF(7.77, 7.77, 7.77) @ 2437 MHz; Calibrated: 2021/3/26
- Sensor-Surface: 1.4mm (Mechanical Surface Detection)
- Electronics: DAE4 Sn861; Calibrated: 2021/4/14
- Phantom: ELI Phantom_1204; Type: QD OVA 002 Ax;
- Measurement SW: DASY52, Version 52.10 (4); SEMCAD X Version 14.6.14 (7501)

Area Scan (91x321x1): Interpolated grid: dx=1.200 mm, dy=1.200 mm
Maximum value of SAR (interpolated) = 0.174 W/kg

Zoom Scan (7x7x7)/Cube 0: Measurement grid: dx=5mm, dy=5mm, dz=5mm
Reference Value = 10.27 V/m; Power Drift = -0.04 dB
Peak SAR (extrapolated) = 0.222 W/kg
SAR(1 g) = 0.120 W/kg; SAR(10 g) = 0.060 W/kg (SAR corrected for target medium)
Smallest distance from peaks to all points 3 dB below = 12 mm
Ratio of SAR at M2 to SAR at M1 = 52.5%
Maximum value of SAR (measured) = 0.184 W/kg

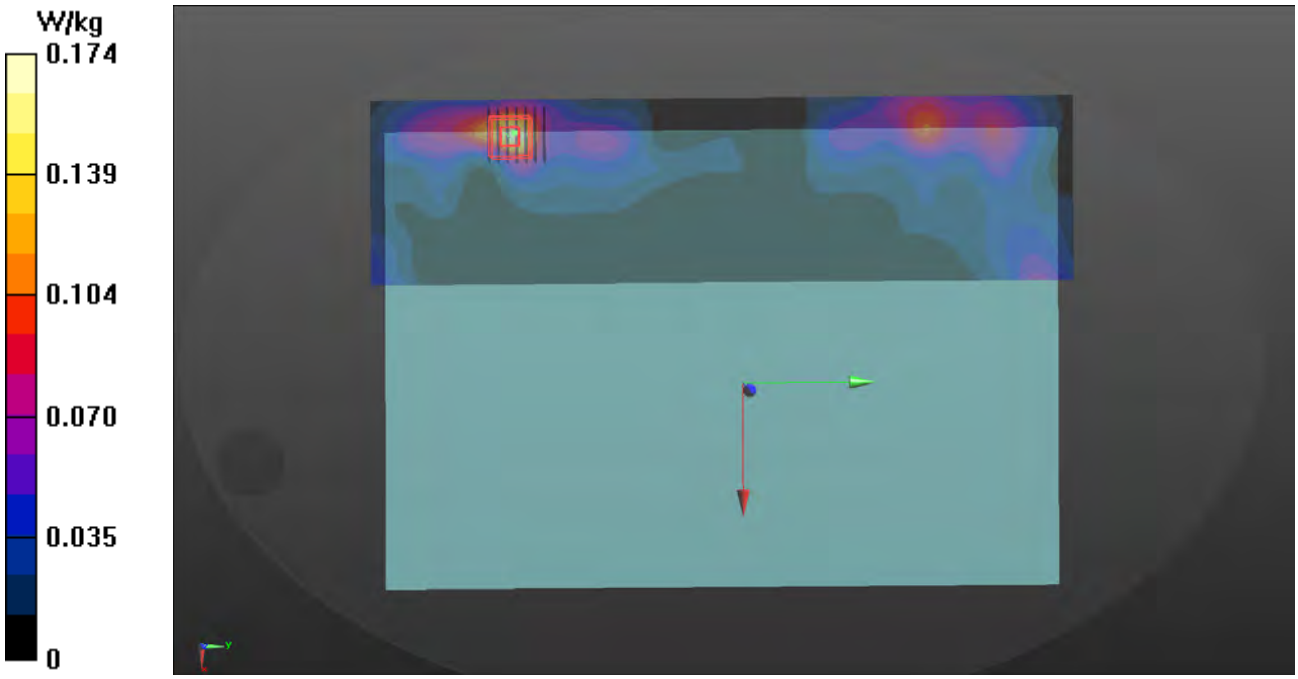

Plots of System Verification

Test Laboratory: Bureau Veritas ADT SAR/HAC Testing Lab Date: 2022/2/22

P02 WLAN5.3G_802.11a_Lid Closed Mode_0mm_Ch56_Ant 0

DUT: BFLF-WTW-P21123601

Communication System: UID 10062 - CAD, IEEE 802.11a WiFi 5 GHz (OFDM, 6 Mbps); Frequency: 5280 MHz;Duty Cycle: 1:1.03
Medium: H34T60N1_0222 Medium parameters used: f = 5280 MHz; σ = 4.801 S/m; ε_r = 34.986; ρ = 1000 kg/m^3
Ambient Temperature：23.4 ℃ ； Liquid Temperature：23.1 ℃

DASY5 Configuration:
- Probe: EX3DV4 - SN3650; ConvF(5.29, 5.29, 5.29) @ 5280 MHz; Calibrated: 2021/3/26
- Sensor-Surface: 1.4mm (Mechanical Surface Detection)
- Electronics: DAE4 Sn861; Calibrated: 2021/4/14
- Phantom: ELI Phantom_1204; Type: QD OVA 002 Ax;
- Measurement SW: DASY52, Version 52.10 (4); SEMCAD X Version 14.6.14 (7501)

Area Scan (101x381x1): Interpolated grid: dx=1.000 mm, dy=1.000 mm
Maximum value of SAR (interpolated) = 0.749 W/kg

Zoom Scan (7x7x7)/Cube 0: Measurement grid: dx=4mm, dy=4mm, dz=1.4mm
Reference Value = 13.27 V/m; Power Drift = -0.09 dB
Peak SAR (extrapolated) = 1.16 W/kg
SAR(1 g) = 0.323 W/kg; SAR(10 g) = 0.117 W/kg (SAR corrected for target medium)
Smallest distance from peaks to all points 3 dB below = 9.6 mm
Ratio of SAR at M2 to SAR at M1 = 65.6%
Maximum value of SAR (measured) = 0.720 W/kg

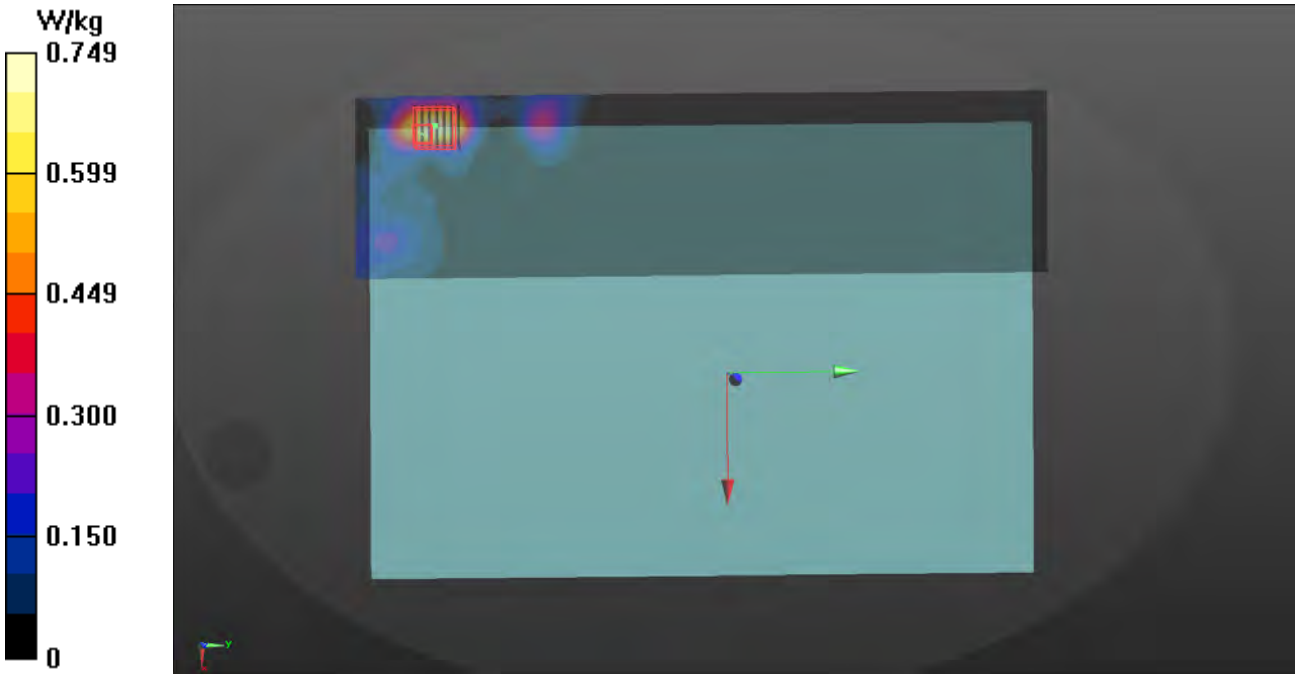

Plots of System Verification

Test Laboratory: Bureau Veritas ADT SAR/HAC Testing Lab Date: 2022/2/22

P03 WLAN5.6G_802.11n HT40_Lid Closed Mode_0mm_Ch110_Ant 0+1

DUT: BFLF-WTW-P21123601

Communication System: UID 10599 - AAC, IEEE 802.11n (HT Mixed, 40MHz, MCS0); Frequency: 5550 MHz;Duty Cycle: 1:1.02
Medium: H34T60N1_0222 Medium parameters used: f = 5550 MHz; σ = 5.056 S/m; ε_r = 34.605; ρ = 1000 kg/m^3
Ambient Temperature：23.4 ℃ ； Liquid Temperature：23.1 ℃

DASY5 Configuration:
- Probe: EX3DV4 - SN3650; ConvF(4.8, 4.8, 4.8) @ 5550 MHz; Calibrated: 2021/3/26
- Sensor-Surface: 1.4mm (Mechanical Surface Detection)
- Electronics: DAE4 Sn861; Calibrated: 2021/4/14
- Phantom: ELI Phantom_1204; Type: QD OVA 002 Ax;
- Measurement SW: DASY52, Version 52.10 (4); SEMCAD X Version 14.6.14 (7501)

Area Scan (101x381x1): Interpolated grid: dx=1.000 mm, dy=1.000 mm
Maximum value of SAR (interpolated) = 0.944 W/kg

Zoom Scan (7x7x7)/Cube 0: Measurement grid: dx=4mm, dy=4mm, dz=1.4mm
Reference Value = 2.974 V/m; Power Drift = -0.09 dB
Peak SAR (extrapolated) = 1.32 W/kg
SAR(1 g) = 0.347 W/kg; SAR(10 g) = 0.115 W/kg (SAR corrected for target medium)
Smallest distance from peaks to all points 3 dB below = 6.5 mm
Ratio of SAR at M2 to SAR at M1 = 64%
Maximum value of SAR (measured) = 0.812 W/kg

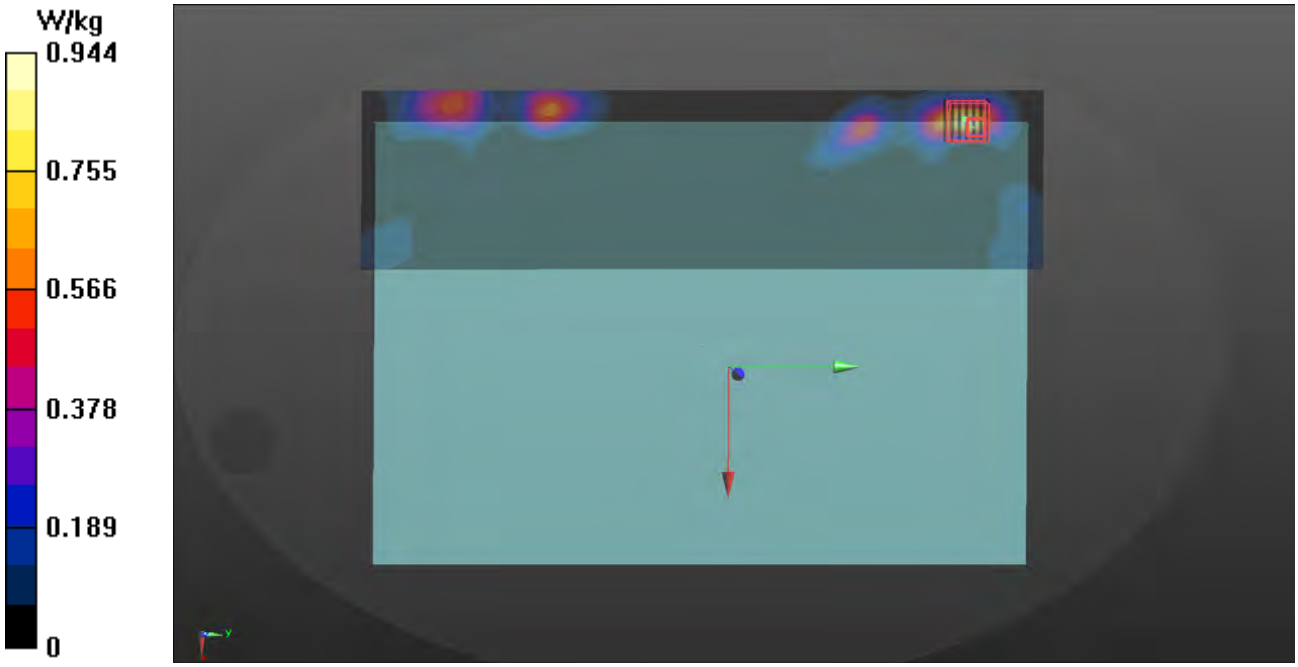

Plots of System Verification

Test Laboratory: Bureau Veritas ADT SAR/HAC Testing Lab Date: 2022/2/22

P04 WLAN5.8G_802.11ac VHT80_Lid Closed Mode_0mm_Ch155_Ant 1

DUT: BFLF-WTW-P21123601

Communication System: UID 10544 - AAC, IEEE 802.11ac WiFi (80MHz, MCS0); Frequency: 5775 MHz;Duty Cycle: 1:1.02
Medium: H34T60N1_0222 Medium parameters used: f = 5775 MHz; σ = 5.29 S/m; ε_r = 34.289; ρ = 1000 kg/m^3
Ambient Temperature：23.4 ℃ ； Liquid Temperature：23.1 ℃

DASY5 Configuration:
- Probe: EX3DV4 - SN3650; ConvF(5.1, 5.1, 5.1) @ 5775 MHz; Calibrated: 2021/3/26
- Sensor-Surface: 1.4mm (Mechanical Surface Detection)
- Electronics: DAE4 Sn861; Calibrated: 2021/4/14
- Phantom: ELI Phantom_1204; Type: QD OVA 002 Ax;
- Measurement SW: DASY52, Version 52.10 (4); SEMCAD X Version 14.6.14 (7501)

Area Scan (101x381x1): Interpolated grid: dx=1.000 mm, dy=1.000 mm
Maximum value of SAR (interpolated) = 0.665 W/kg

Zoom Scan (7x7x7)/Cube 0: Measurement grid: dx=4mm, dy=4mm, dz=1.4mm
Reference Value = 11.85 V/m; Power Drift = -0.07 dB
Peak SAR (extrapolated) = 1.33 W/kg
SAR(1 g) = 0.317 W/kg; SAR(10 g) = 0.097 W/kg (SAR corrected for target medium)
Smallest distance from peaks to all points 3 dB below = 6.8 mm
Ratio of SAR at M2 to SAR at M1 = 61.4%
Maximum value of SAR (measured) = 0.824 W/kg

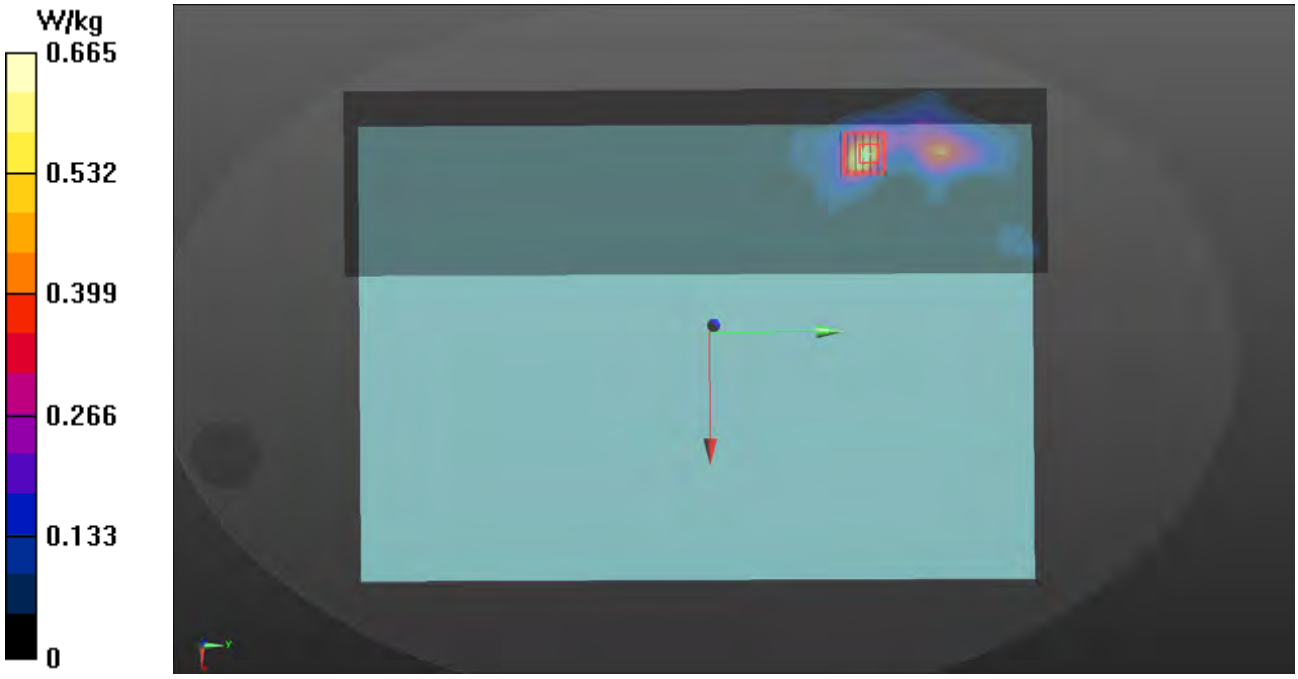

Plots of System Verification

Test Laboratory: Bureau Veritas ADT SAR/HAC Testing Lab Date: 2022/2/22

P05 BT_BDR_Lid Closed Mode_0mm_Ch78_Ant 1

DUT: BFLF-WTW-P21123601

Communication System: UID 10032 - CAA, IEEE 802.15.1 Bluetooth (GFSK, DH5); Frequency: 2480 MHz;Duty Cycle: 1:1.3
Medium: H19T27N1_0222 Medium parameters used: f = 2480 MHz; σ = 1.816 S/m; ε_r = 37.829; ρ = 1000 kg/m^3
Ambient Temperature：23.4 ℃ ； Liquid Temperature：23.1 ℃

DASY5 Configuration:
- Probe: EX3DV4 - SN3650; ConvF(7.77, 7.77, 7.77) @ 2480 MHz; Calibrated: 2021/3/26
- Sensor-Surface: 1.4mm (Mechanical Surface Detection)
- Electronics: DAE4 Sn861; Calibrated: 2021/4/14
- Phantom: ELI Phantom_1204; Type: QD OVA 002 Ax;
- Measurement SW: DASY52, Version 52.10 (4); SEMCAD X Version 14.6.14 (7501)

Area Scan (91x321x1): Interpolated grid: dx=1.200 mm, dy=1.200 mm
Maximum value of SAR (interpolated) = 0.00780 W/kg

Zoom Scan (7x7x7)/Cube 0: Measurement grid: dx=5mm, dy=5mm, dz=5mm
Reference Value = 0.2140 V/m; Power Drift = -0.01 dB
Peak SAR (extrapolated) = 0.0190 W/kg
SAR(1 g) = 0.00272 W/kg; SAR(10 g) = 0.000931 W/kg (SAR corrected for target medium)
Smallest distance from peaks to all points 3 dB below: Larger than measurement grid (> 15 mm)
Ratio of SAR at M2 to SAR at M1 = 43%
Maximum value of SAR (measured) = 0.00880 W/kg

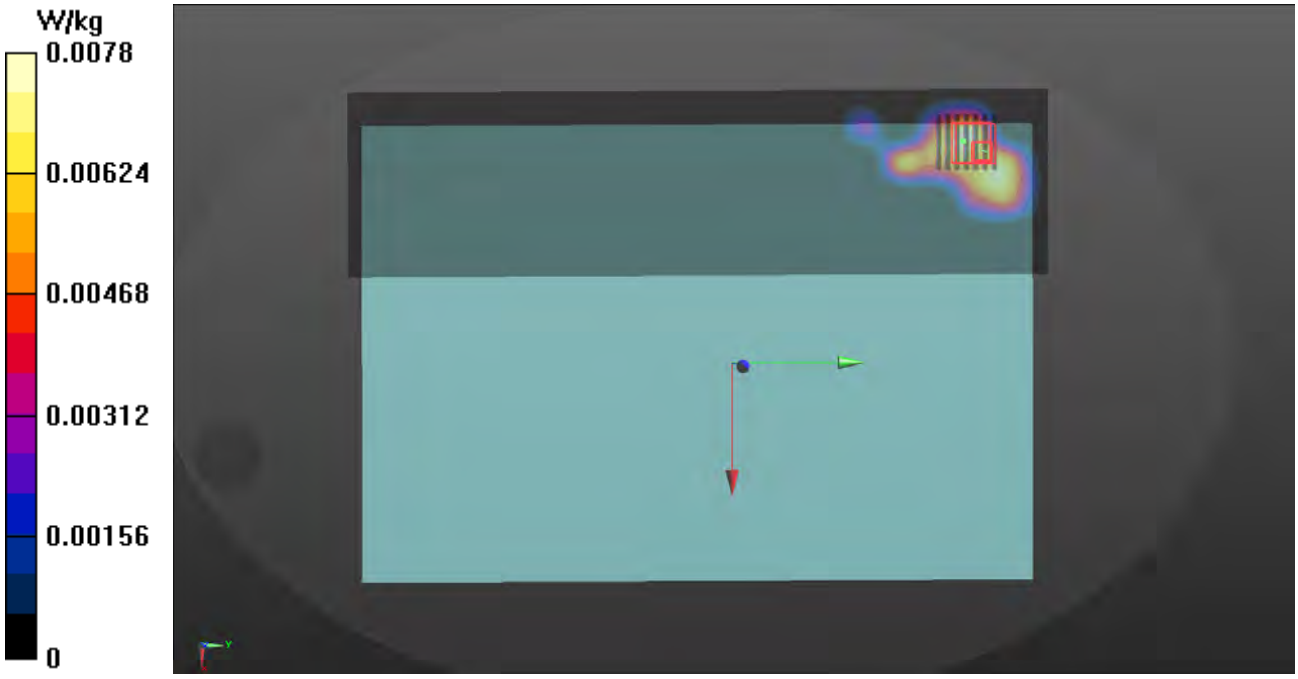

.Test Lab: Bureau Veritas ADT SAR/HAC/PD Testing Lab

Measurement Report

P06 UNII-5_802.11ax HE160_Lid Closed Mode_0mm_Ch15_Ant 0+1

Device under Test Properties

Model, Manufacturer	Dimensions [mm]	IMEI	DUT Type
BFLF-WTW-P21123601,	364.0 x 246.0 x 20.0		Laptop

Exposure Conditions

Phantom Section, TSL	Position, Test Distance [mm]	Band	Group, UID	Frequency [MHz], Channel Number	Conversion Factor	TSL Conductivity [S/m]	TSL Permittivity
Flat, HSL	Lid Closed Mode, 0.00	U-NII-5	WLAN, 10755-AAC	6025.0, 15	5.7	5.39	35.4

Hardware Setup

Phantom	TSL, Measured Date	Probe, Calibration Date	DAE, Calibration Date
ELI V5.0 (20deg probe tilt) - 1204	H50T72N1, 2022-Feb-22	EX3DV4 - SN3650, 2021-03-26	DAE4 Sn861, 2021-04-14

Scan Setup

	Area Scan	Zoom Scan
Grid Extents [mm]	75.0 x 375.0	22.0 x 22.0 x 22.0
Grid Steps [mm]	7.5 x 7.5	3.4 x 3.4 x 1.4
Sensor Surface [mm]	3.0	1.4

Measurement Results

	Area Scan	Zoom Scan
Date	2022-02-22	2022-02-22
psSAR1g [W/kg]	0.024	0.038
psSAR10g [W/kg]	0.008	0.014
Power Drift [dB]	-0.08	0.06

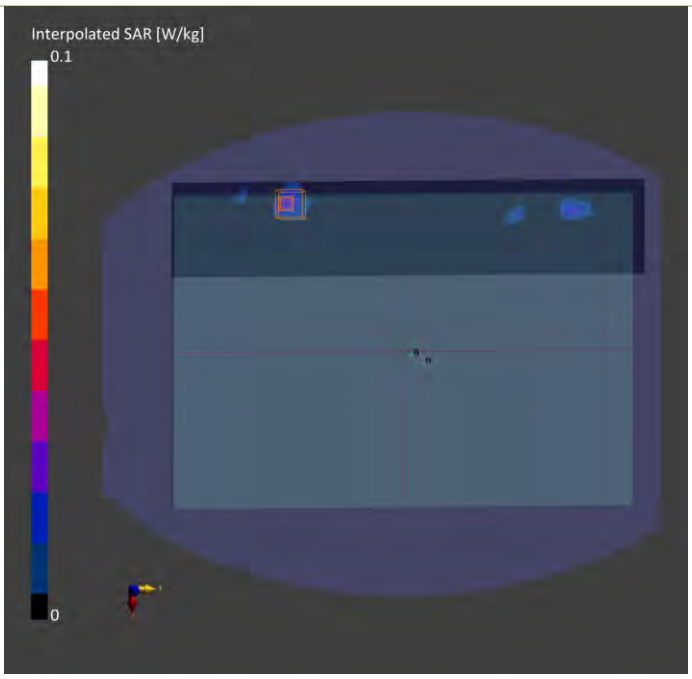

Plots of System Verification

Test Lab: Bureau Veritas ADT SAR/HAC/PD Testing Lab

Power Density Plot No.:

P06 802.11ax HE160_Lid Closed Mode_0mm_Ch15_Ant 0+1

Device under Test Properties

Name, Manufacturer	Dimensions [mm]	IMEI	DUT Type
BFLF-WTW-P21123601	364.0 x 246.0 x 20.0		Laptop

Exposure Conditions

Phantom Section	Position, Test Distance [mm]	Band	Group, UID	Frequency [MHz], Channel Number	Conversion Factor
5GAir	Lip Close Mode 2.00	U-NII-5	WLAN 10755	6025.0 15	1.0

Hardware Setup

Phantom	Medium	Probe, Calibration Date	DAE, Calibration Date
mmWave	Air---	EUmmWV4 - SN9438_F1-55GHz, 2021-07-26	DAE4 Sn1698, 2021-11-09

Scan Setup

	5G Scan
Grid Extents [mm]	120.0 x 12.0
Grid Steps [lambda]	0.25 x 0.25
Sensor Surface [mm]	2.0

Measurement Results

	5G Scan
Date	2022-02-23
Avg. Area [cm^2]	4.00
$pS_{tot}avg$[W/m^2]	0.308
$pS_n avg$ [W/m^2]	0.228
E_{peak} [V/m]	16.2
Power Drift [dB]	-0.16

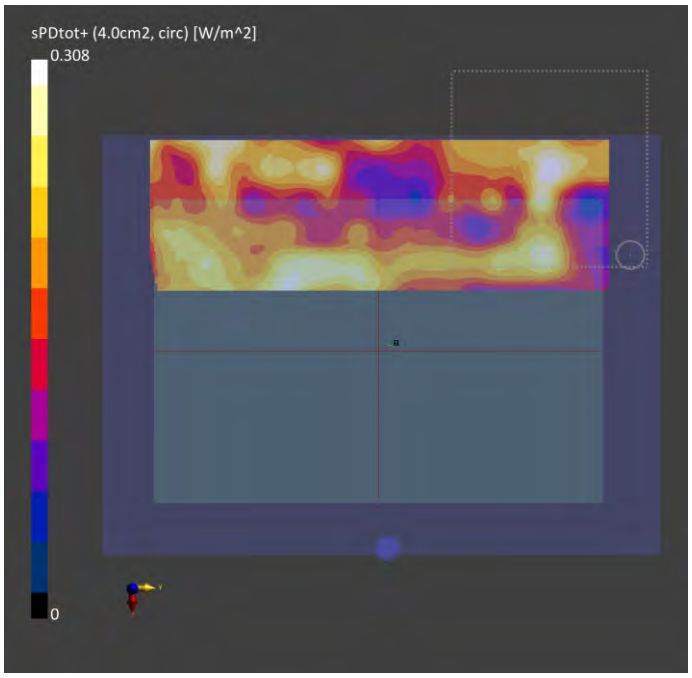

Annex C. Tissue & System Verification

The measuring results for tissue simulating liquid and system check are shown as below.

Note:

1. For Section 4.3, the dielectric properties of the tissue simulating liquid have been measured within 24 hours before the SAR testing and within ±10 % of the target values. Liquid temperature during the SAR testing has kept within ±2 ℃.
2. For Section 4.4, The SAR measurement system was validated according to procedures in KDB 865664 D01. The validation status in tabulated summary is as below.
3. For Section 4.5, Comparing to the reference SAR value provided by SPEAG in dipole calibration certificate, the deviation of system check results is within its specification of 10 %. The result indicates the system check can meet the variation criterion and the plots please refer to Annex A of this report.

Tissue Verification									Validation for CW			Validation for Modulation				System Validation					Note			
Plot No.	Frequency (MHz)	Liquid Temp. (℃)	Conductivity (σ)	Permittivity (εr)	Targeted Conductivity (σ)	Targeted Permittivity (εr)	Deviation Conductivity (σ)	Deviation Permittivity (εr)	Sensitivity Range	Probe Linearity	Probe Isotropy	Modulation Type	Duty Factor	PAR	Date	Frequency (MHz)	Targeted 1g SAR (W/kg)	Measured 1g SAR (W/kg)	Normalized 1g SAR (W/kg)	Deviation (%)	Dipole S/N	Probe S/N	DAE S/N	Output Power (dB)
S01	2450	23.1	1.794	37.894	1.8	39.2	-0.33	-3.33	Pass	Pass	Pass	OFDM	N/A	Pass	Feb. 22, 2022	2450	52.60	2.42	48.29	-8.20	737	3650	861	17
S02	5250	23.1	4.76	35.003	4.71	35.9	1.06	-2.50	Pass	Pass	Pass	OFDM	N/A	Pass	Feb. 22, 2022	5250	80.60	3.8	75.82	-5.93	1019	3650	861	17
S03	5600	23.1	5.128	34.518	5.07	35.5	1.14	-2.77	Pass	Pass	Pass	OFDM	N/A	Pass	Feb. 22, 2022	5600	82.40	4.08	81.41	-1.21	1019	3650	861	17
S04	5750	23.1	5.275	34.361	5.22	35.4	1.05	-2.94	Pass	Pass	Pass	OFDM	N/A	Pass	Feb. 22, 2022	5750	79.40	3.63	72.43	-8.78	1019	3650	861	17
S05	2450	23.1	1.794	37.894	1.8	39.2	-0.33	-3.33	Pass	Pass	Pass	OFDM	N/A	Pass	Feb. 22, 2022	2450	52.60	2.42	48.29	-8.20	737	3650	861	17
S06	6500	23.1	6.19	33.7	6.07	34.5	1.98	-2.32	Pass	Pass	Pass	OFDM	N/A	Pass	Feb. 22, 2022	6500	289.00	28.4	284.00	-1.73	1008	3650	861	20

Plot No.	Test Date	Frequency [GHz]	mmWave Probe S/N	Verification Source S/N	Averaging Area [cm^2]	Distance [mm]	Target Power Density [W/m^2]	Measured Power Density [W/m^2]	Deviation [%]
S06	Feb. 23, 2022	10	9438	1025	4	10.0	51.3	49.2	-4.09%

Annex D. Maximum Target Conducted Power

The maximum conducted average power (Unit: dBm) including tune-up tolerance is shown as below

WLAN Tune-up Power (Full)							
WLAN 2.4GHz							
Mode	Channel	Frequency	SISO Ant 0 Max Tune up	SISO Ant 1 Max Tune up	MIMO Ant 0 Tune up	MIMO Ant 1 Tune up	MIMO Ant 0+1 Max Tune up
802.11b	1	2412	20.000	20.000			
	6	2437	20.000	20.000			
	11	2462	20.000	20.000			
	12	2467	18.750	19.250			
	13	2472	15.750	16.750			
802.11g	1	2412	20.000	20.000			
	6	2437	20.000	20.000			
	11	2462	18.000	18.250			
	12	2467	15.000	14.750			
	13	2472	11.750	12.000			
802.11n HT20	1	2412	19.500	19.250	16.500	16.500	19.500
	6	2437	20.000	20.000	20.000	20.000	23.000
	11	2462	18.000	18.250	16.500	16.500	19.500
	12	2467	15.000	14.750	8.250	8.250	11.250
	13	2472	11.750	12.000	8.500	8.500	11.500
802.11n HT40	3	2422	15.500	15.750	15.250	15.250	18.250
	6	2437	17.500	17.750	16.000	16.000	19.000
	9	2452	15.500	17.000	15.500	15.500	18.500
	10	2457	12.250	12.500	11.250	11.250	14.250
	11	2462	9.750	10.750	8.250	8.250	11.250
802.11ax HE20	1	2412	19.500	19.250	14.500	14.500	17.500
	6	2437	20.000	20.000	17.875	17.875	20.875
	11	2462	18.000	18.250	14.500	14.500	17.500
	12	2467	15.000	14.750	11.250	11.250	14.250
	13	2472	11.750	12.000	8.500	8.500	11.500
802.11ax HE40	3	2422	15.500	15.750	13.500	13.500	16.500
	6	2437	17.500	17.750	13.750	13.750	16.750
	9	2452	15.500	17.000	12.750	12.750	15.750
	10	2457	12.250	12.500	11.250	11.250	14.250
	11	2462	9.750	10.750	8.250	8.250	11.250

WLAN Tune-up Power (Laptop)					
Bluetooth					
Mode	Channel	Frequency		Ant 1 Max Tune-up	
BR / EDR	0	2402		10.5/9.5	
	39	2441		10.5/9.5	
	78	2480		10.5/9.5	
LE	0	2402		7.0	
	19	2440		7.0	
	39	2480		7.0	

WLAN Tune-up Power (Laptop)							
WLAN 5.2GHz							
Mode	Channel	Frequency	SISO Ant 0 Max Tune up	SISO Ant 1 Max Tune up	MIMO Ant 0 Tune up	MIMO Ant 1 Tune up	MIMO Ant 0+1 Max Tune up
802.11a	36	5180	19.500	19.500			
	40	5200	20.000	20.000			
	44	5220	20.000	20.000			
	48	5240	19.875	20.000			
802.11n HT20	36	5180	19.500	19.500	18.000	18.000	21.000
	40	5200	20.000	20.000	18.500	18.500	21.500
	44	5220	20.000	20.000	18.500	18.500	21.500
	48	5240	19.500	20.000	18.500	18.500	21.500
802.11n HT40	38	5190	17.750	18.750	15.500	15.500	18.500
	46	5230	20.000	20.000	20.000	20.000	23.000
802.11ac VHT80	42	5210	18.500	18.250	15.000	15.000	18.000
802.11ax HE20	36	5180	19.500	19.500	15.500	15.500	18.500
	40	5200	20.000	20.000	18.375	18.375	21.375
	44	5220	20.000	20.000	18.375	18.375	21.375
	48	5240	19.750	20.000	18.375	18.375	21.375
802.11ax HE40	38	5190	17.750	18.750	14.500	14.500	17.500
	46	5230	20.000	20.000	18.875	18.875	21.875
802.11ax HE80	42	5210	18.500	18.250	14.500	14.500	17.500

WLAN Tune-up Power (Laptop)							
WLAN 5.3GHz							
Mode	Channel	Frequency	SISO Ant 0 Max Tune up	SISO Ant 1 Max Tune up	MIMO Ant 0 Tune up	MIMO Ant 1 Tune up	MIMO Ant 0+1 Max Tune up
802.11a	52	5260	19.875	20.000			
	56	5280	20.000	20.000			
	60	5300	20.000	20.000			
	64	5320	20.000	20.000			
802.11n HT20	52	5260	19.750	20.000	18.000	18.000	21.000
	56	5280	20.000	20.000	18.000	18.000	21.000
	60	5300	20.000	20.000	18.000	18.000	21.000
	64	5320	20.000	20.000	18.000	18.000	21.000
802.11n HT40	54	5270	19.875	20.000	20.000	20.000	23.000
	62	5310	17.500	17.500	16.500	16.500	19.500
802.11ac VHT80	58	5290	17.500	17.500	14.250	14.250	17.250
802.11ac VHT160	50	5250	14.500	14.000	12.500	12.500	15.500
802.11ax HE20	52	5260	19.875	20.000	18.250	18.250	21.250
	56	5280	20.000	20.000	18.000	18.000	21.000
	60	5300	20.000	20.000	18.375	18.375	21.375
	64	5320	20.000	20.000	15.750	15.750	18.750
802.11ax HE40	54	5270	19.750	20.000	18.750	18.750	21.750
	62	5310	17.500	17.500	14.250	14.250	17.250
802.11ax HE80	58	5290	17.500	17.500	14.250	14.250	17.250
802.11ax HE160	50	5250	14.500	14.000	12.500	12.500	15.500

WLAN Tune-up Power (Laptop)							
WLAN 5.6GHz							
Mode	Channel	Frequency	SISO Ant 0 Max Tune up	SISO Ant 1 Max Tune up	MIMO Ant 0 Tune up	MIMO Ant 1 Tune up	MIMO Ant 0+1 Max Tune up
802.11a	100	5500	20.000	20.000			
	116	5580	20.000	20.000			
	120	5600	20.000	20.000			
	124	5620	20.000	20.000			
	132	5660	20.000	20.000			
	140	5700	20.000	20.000			
	144	5720	20.000	20.000			
802.11n HT20	100	5500	20.000	20.000	18.500	18.500	21.500
	116	5580	20.000	20.000	18.500	18.500	21.500
	120	5600	20.000	20.000	18.500	18.500	21.500
	124	5620	20.000	20.000	18.500	18.500	21.500
	132	5660	20.000	20.000	18.500	18.500	21.500
	140	5700	20.000	20.000	18.500	18.500	21.500
	144	5720	20.000	20.000	17.000	17.000	20.000
802.11n HT40	102	5510	19.750	20.000	18.000	18.000	21.000
	110	5550	20.000	20.000	18.000	18.000	21.000
	118	5590	20.000	20.000	18.000	18.000	21.000
	126	5630	20.000	20.000	18.000	18.000	21.000
	134	5670	20.000	20.000	19.500	19.500	22.500
	142	5710	20.000	20.000	17.000	17.000	20.000
802.11ac VHT80	106	5530	18.500	18.750	14.750	14.750	17.750
	122	5610	20.000	20.000	18.000	18.000	21.000
	138	5690	20.000	20.000	17.500	17.500	20.500
802.11ac VHT160	114	5570	15.500	15.500	14.000	14.000	17.000
802.11ax HE20	100	5500	20.000	20.000	18.500	18.500	21.500
	116	5580	20.000	20.000	18.500	18.500	21.500
	120	5600	20.000	20.000	18.500	18.500	21.500
	124	5620	20.000	20.000	18.500	18.500	21.500
	132	5660	20.000	20.000	18.500	18.500	21.500
	140	5700	20.000	20.000	18.500	18.500	21.500
	144	5720	20.000	20.000	17.000	17.000	20.000
802.11ax HE40	102	5510	19.750	20.000	18.000	18.000	21.000
	110	5550	20.000	20.000	18.000	18.000	21.000
	118	5590	20.000	20.000	18.000	18.000	21.000
	126	5630	20.000	20.000	18.000	18.000	21.000
	134	5670	20.000	20.000	19.500	19.500	22.500
	142	5710	20.000	20.000	17.000	17.000	20.000
802.11ax HE80	106	5530	18.500	18.750	14.750	14.750	17.750
	122	5610	20.000	20.000	18.000	18.000	21.000
	138	5690	20.000	20.000	17.500	17.500	20.500
802.11ax HE160	114	5570	15.500	15.500	14.000	14.000	17.000

WLAN Tune-up Power (Full)							
WLAN 5.8GHz							
Mode	Channel	Frequency	SISO Ant 0 Max Tune up	SISO Ant 1 Max Tune up	MIMO Ant 0 Tune up	MIMO Ant 1 Tune up	MIMO Ant 0+1 Max Tune up
802.11a	149	5745	20.000	20.000			
	153	5765	20.000	20.000			
	157	5785	20.000	20.000			
	161	5805	20.000	20.000			
	165	5825	20.000	20.000			
802.11n HT20	149	5745	20.000	20.000	20.000	20.000	23.000
	153	5765	20.000	20.000	20.000	20.000	23.000
	157	5785	20.000	20.000	20.000	20.000	23.000
	161	5805	20.000	20.000	20.000	20.000	23.000
	165	5825	20.000	20.000	20.000	20.000	23.000
802.11n HT40	151	5755	20.000	20.000	20.000	20.000	23.000
	159	5795	20.000	20.000	20.000	20.000	23.000
802.11ac VHT80	155	5775	20.000	20.000	15.750	15.750	18.750
802.11ax HE20	149	5745	20.000	20.000	18.125	18.125	21.125
	153	5765	20.000	20.000	18.125	18.125	21.125
	157	5785	20.000	20.000	18.125	18.125	21.125
	161	5805	20.000	20.000	18.125	18.125	21.125
	165	5825	20.000	20.000	18.250	18.250	21.250
802.11ax HE40	151	5755	20.000	20.000	18.625	18.625	21.625
	159	5795	20.000	20.000	18.625	18.625	21.625
802.11ax HE80	155	5775	20.000	20.000	15.750	15.750	18.750

WLAN Tune-up Power (Full)							
UNII-5							
Mode	Channel	Frequency	SISO Ant 0 Max Tune up	SISO Ant 1 Max Tune up	MIMO Ant 0 Tune up	MIMO Ant 1 Tune up	MIMO Ant 0+1 Max Tune up
802.11ax HE20	1	5955	5.000	5.000	2.000	2.000	5.000
	5	5975	5.000	5.000	2.000	2.000	5.000
	9	5995	5.000	5.000	2.000	2.000	5.000
	13	6015	5.000	5.000	2.000	2.000	5.000
	17	6035	5.000	5.000	2.000	2.000	5.000
	21	6055	5.000	5.000	2.000	2.000	5.000
	25	6075	5.000	5.000	2.000	2.000	5.000
	29	6095	5.000	5.000	2.000	2.000	5.000
	33	6115	5.000	5.000	2.000	2.000	5.000
	37	6135	5.000	5.000	2.000	2.000	5.000
	41	6155	5.000	5.000	2.000	2.000	5.000
	45	6175	5.000	5.000	2.000	2.000	5.000
	49	6195	5.000	5.000	2.000	2.000	5.000
	53	6215	5.000	5.000	2.000	2.000	5.000
	57	6235	5.000	5.000	2.000	2.000	5.000
	61	6255	5.000	5.000	2.000	2.000	5.000
	65	6275	5.000	5.000	2.000	2.000	5.000
	69	6295	5.000	5.000	2.000	2.000	5.000
	73	6315	5.000	5.000	2.000	2.000	5.000
	77	6335	5.000	5.000	2.000	2.000	5.000
	81	6355	5.000	5.000	2.000	2.000	5.000
	85	6375	5.000	5.000	2.000	2.000	5.000
	89	6395	5.000	5.000	2.000	2.000	5.000
	93	6415	5.000	5.000	2.000	2.000	5.000
802.11ax HE40	3	5965	8.250	8.250	5.250	5.250	8.250
	11	6005	8.250	8.250	5.250	5.250	8.250
	19	6045	8.250	8.250	5.250	5.250	8.250
	27	6085	8.250	8.250	5.250	5.250	8.250
	35	6125	8.250	8.250	5.250	5.250	8.250
	43	6165	8.250	8.250	5.250	5.250	8.250
	51	6205	8.250	8.250	5.250	5.250	8.250
	59	6245	8.250	8.250	5.250	5.250	8.250
	67	6285	8.250	8.250	5.250	5.250	8.250
	75	6325	8.250	8.250	5.250	5.250	8.250
	83	6365	8.250	8.250	5.250	5.250	8.250
	91	6405	8.250	8.250	5.250	5.250	8.250
802.11ax HE80	7	5985	10.750	10.750	7.750	7.750	10.750
	23	6065	10.750	10.750	7.750	7.750	10.750
	39	6145	10.750	10.750	7.750	7.750	10.750
	55	6225	10.750	10.750	7.750	7.750	10.750
	71	6305	10.750	10.750	7.750	7.750	10.750
	87	6385	10.750	10.750	7.750	7.750	10.750
802.11ax HE160	15	6025	13.000	13.000	10.500	10.500	13.500
	47	6185	13.000	13.000	10.500	10.500	13.500
	79	6345	13.000	13.000	10.500	10.500	13.500

WLAN Tune-up Power (Full)							
UNII-6							
Mode	Channel	Frequency	SISO Ant 0 Max Tune up	SISO Ant 1 Max Tune up	MIMO Ant 0 Tune up	MIMO Ant 1 Tune up	MIMO Ant 0+1 Max Tune up
802.11ax HE20	97	6435	5.000	5.000	2.000	2.000	5.000
	101	6455	5.000	5.000	2.000	2.000	5.000
	105	6475	5.000	5.000	2.000	2.000	5.000
	109	6495	5.000	5.000	2.000	2.000	5.000
	113	6515	5.000	5.000	2.000	2.000	5.000
	117	6535	4.250	4.250	1.250	1.250	4.250
802.11ax HE40	99	6445	8.250	8.250	5.250	5.250	8.250
	107	6485	8.250	8.250	5.250	5.250	8.250
	115	6525	8.250	8.250	5.250	5.250	8.250
802.11ax HE80	103	6465	10.750	10.750	7.750	7.750	10.750
	119	6545	10.750	10.750	7.750	7.750	10.750
802.11ax HE160	111	6505	13.000	13.000	10.500	10.500	13.500

WLAN Tune-up Power (Full)							
UNII-7							
Mode	Channel	Frequency	SISO Ant 0 Max Tune up	SISO Ant 1 Max Tune up	MIMO Ant 0 Tune up	MIMO Ant 1 Tune up	MIMO Ant 0+1 Max Tune up
802.11ax HE20	121	6555	4.250	4.250	1.250	1.250	4.250
	125	6575	4.250	4.250	1.250	1.250	4.250
	129	6595	4.250	4.250	1.250	1.250	4.250
	133	6615	4.250	4.250	1.250	1.250	4.250
	137	6635	4.250	4.250	1.250	1.250	4.250
	141	6655	4.250	4.250	1.250	1.250	4.250
	145	6675	4.250	4.250	1.250	1.250	4.250
	149	6695	4.250	4.250	1.250	1.250	4.250
	153	6715	4.250	4.250	1.250	1.250	4.250
	157	6735	4.250	4.250	1.250	1.250	4.250
	161	6755	4.250	4.250	1.250	1.250	4.250
	165	6775	4.250	4.250	1.250	1.250	4.250
	169	6795	4.250	4.250	1.250	1.250	4.250
	173	6815	4.250	4.250	1.250	1.250	4.250
	177	6835	4.250	4.250	1.250	1.250	4.250
	181	6855	4.250	4.250	1.250	1.250	4.250
	185	6875	4.250	4.250	1.250	1.250	4.250
802.11ax HE40	123	6565	7.500	7.500	4.500	4.500	7.500
	131	6605	7.500	7.500	4.500	4.500	7.500
	139	6645	7.500	7.500	4.500	4.500	7.500
	147	6685	7.500	7.500	4.500	4.500	7.500
	155	6725	7.500	7.500	4.500	4.500	7.500
	163	6765	7.500	7.500	4.500	4.500	7.500
	171	6805	7.500	7.500	4.500	4.500	7.500
	179	6845	7.500	7.500	4.500	4.500	7.500
	187	6885	7.500	7.500	4.500	4.500	7.500
802.11ax HE80	135	6625	10.000	10.000	7.000	7.000	10.000
	151	6705	10.000	10.000	7.000	7.000	10.000
	167	6785	10.000	10.000	7.000	7.000	10.000
	183	6865	10.000	10.000	7.000	7.000	10.000
802.11ax HE160	143	6665	12.750	12.750	9.750	9.750	12.750
	175	6825	12.750	12.750	9.750	9.750	12.750

WLAN Tune-up Power (Full)							
UNII-8							
Mode	Channel	Frequency	SISO Ant 0 Max Tune up	SISO Ant 1 Max Tune up	MIMO Ant 0 Tune up	MIMO Ant 1 Tune up	MIMO Ant 0+1 Max Tune up
802.11ax HE20	189	6895	4.250	4.250	1.250	1.250	4.250
	193	6915	4.250	4.250	1.250	1.250	4.250
	197	6935	4.250	4.250	1.250	1.250	4.250
	201	6955	4.250	4.250	1.250	1.250	4.250
	205	6975	4.250	4.250	1.250	1.250	4.250
	209	6995	4.250	4.250	1.250	1.250	4.250
	213	7015	4.250	4.250	1.250	1.250	4.250
	217	7035	4.250	4.250	1.250	1.250	4.250
	221	7055	4.250	4.250	1.250	1.250	4.250
	225	7075	4.250	4.250	1.250	1.250	4.250
	229	7095	4.250	4.250	1.250	1.250	4.250
	233	7115	-1.000	-1.000	-4.000	-4.000	-1.000
802.11ax HE40	195	6925	7.500	7.500	4.500	4.500	7.500
	203	6965	7.500	7.500	4.500	4.500	7.500
	211	7005	7.500	7.500	4.500	4.500	7.500
	219	7045	7.500	7.500	4.500	4.500	7.500
	227	7085	7.500	7.500	4.500	4.500	7.500
802.11ax HE80	199	6945	10.000	10.000	7.000	7.000	10.000
	215	7025	10.000	10.000	7.000	7.000	10.000
802.11ax HE160	207	6985	12.750	12.750	9.750	9.750	12.750

Annex E. Measured Conducted Power Result

The measuring conducted power (Unit: dBm) are shown as below.

WLAN Conducted Power (Laptop_Full)			
WLAN2.4GHz Ant 0			
Mode	Channel	Frequency	SISO Ant 0 Avg. Power
802.11b	1	2412	19.96
	6	2437	19.99
	11	2462	19.92
	12	2467	18.65
	13	2472	15.74
802.11g	1	2412	19.87
	6	2437	19.89
	11	2462	17.87
	12	2467	14.36
	13	2472	11.48
802.11n HT20	1	2412	18.93
	6	2437	19.92
	11	2462	17.96
	12	2467	14.79
	13	2472	11.61
802.11n HT40	3	2422	15.41
	6	2437	17.48
	9	2452	15.29
	10	2457	12.21
	11	2462	9.73
802.11ax HE20	1	2412	19.48
	6	2437	19.85
	11	2462	17.86
	12	2467	14.87
	13	2472	11.68
802.11ax HE40	3	2422	15.31
	6	2437	17.44
	9	2452	15.41
	10	2457	12.20
	11	2462	9.63

WLAN Conducted Power (Laptop_Full)			
WLAN2.4GHz Ant 1			
Mode	Channel	Frequency	SISO Ant 1 Avg. Power
802.11b	1	2412	19.94
	6	2437	19.99
	11	2462	19.80
	12	2467	19.18
	13	2472	16.62
802.11g	1	2412	19.80
	6	2437	19.83
	11	2462	17.83
	12	2467	14.28
	13	2472	11.58
802.11n HT20	1	2412	18.93
	6	2437	19.87
	11	2462	18.10
	12	2467	14.71
	13	2472	11.68
802.11n HT40	3	2422	15.32
	6	2437	17.42
	9	2452	16.65
	10	2457	12.17
	11	2462	10.68
802.11ax HE20	1	2412	19.11
	6	2437	19.76
	11	2462	17.79
	12	2467	14.65
	13	2472	11.65
802.11ax HE40	3	2422	15.62
	6	2437	17.74
	9	2452	16.68
	10	2457	12.40
	11	2462	10.67

WLAN Conducted Power (Laptop_Full)					
WLAN2.4GHz Ant 0+1					
Mode	Channel	Frequency	MIMO Ant 0 Avg. Power	MIMO Ant 1 Avg. Power	MIMO Ant 0+1 Avg. Power
[redacted]					
802.11n HT20	1	2412	16.42	16.33	19.39
	6	2437	19.76	19.82	22.80
	11	2462	16.49	16.41	19.46
	12	2467	8.15	8.17	11.17
	13	2472	8.49	8.38	11.45
802.11n HT40	3	2422	15.00	14.98	18.00
	6	2437	15.65	15.88	18.78
	9	2452	15.38	15.45	18.43
	10	2457	11.11	11.21	14.17
	11	2462	8.11	8.17	11.15
802.11ax HE20	1	2412	14.25	14.31	17.29
	6	2437	17.49	17.68	20.60
	11	2462	14.29	14.38	17.35
	12	2467	11.02	11.21	14.13
	13	2472	8.25	8.47	11.37
802.11ax HE40	3	2422	13.32	13.45	16.40
	6	2437	13.54	13.65	16.61
	9	2452	12.68	12.71	15.71
	10	2457	11.21	11.15	14.19
	11	2462	8.05	8.13	11.10

WLAN Conducted Power (Laptop_Full)			
Bluetooth Ant 1			
Mode	Channel	Frequency	SISO Ant 1 Avg. Power
BR / EDR	0	2402	9.31
	39	2441	9.73
	78	2480	10.38
LE	0	2402	5.78
	19	2440	5.98
	39	2480	6.33

WLAN Conducted Power (Laptop_Full)			
WLAN 5.3GHz Ant 0			
Mode	Channel	Frequency	SISO Ant 0 Avg. Power
802.11a	52	5260	19.76
	56	5280	19.97
	60	5300	19.79
	64	5320	19.83
802.11n HT20	52	5260	19.53
	56	5280	19.92
	60	5300	19.93
	64	5320	19.91
802.11n HT40	54	5270	19.78
	62	5310	17.41
802.11ac VHT80	58	5290	17.38
802.11ac VHT160	50	5250	14.43
802.11ax HE20	52	5260	19.77
	56	5280	19.86
	60	5300	19.81
	64	5320	19.92
802.11ax HE40	54	5270	19.71
	62	5310	17.42
802.11ax HE80	58	5290	17.38
802.11ax HE160	50	5250	14.43

WLAN Conducted Power (Laptop_Full)			
WLAN 5.3GHz Ant 1			
Mode	Channel	Frequency	SISO Ant 1 Avg. Power
802.11a	52	5260	19.85
	56	5280	19.68
	60	5300	19.72
	64	5320	19.82
802.11n HT20	52	5260	19.77
	56	5280	19.65
	60	5300	19.62
	64	5320	19.82
802.11n HT40	54	5270	19.86
	62	5310	17.45
802.11ac VHT80	58	5290	17.43
802.11ac VHT160	50	5250	13.92
802.11ax HE20	52	5260	19.84
	56	5280	19.58
	60	5300	19.62
	64	5320	19.63
802.11ax HE40	54	5270	19.79
	62	5310	17.42
802.11ax HE80	58	5290	17.40
802.11ax HE160	50	5250	13.88

WLAN Conducted Power (Laptop_Full)					
WLAN 5.3GHz Ant 0+1					
Mode	Channel	Frequency	MIMO Ant 0 Avg. Power	MIMO Ant 1 Avg. Power	MIMO Ant 0+1 Avg. Power
[redacted]					
802.11n HT20	52	5260	17.88	17.65	20.78
	56	5280	18.05	17.44	20.77
	60	5300	17.92	17.33	20.65
	64	5320	17.41	17.05	20.24
802.11n HT40	54	5270	20.18	19.66	22.94
	62	5310	16.53	16.24	19.4
802.11ac VHT80	58	5290	14.12	13.79	16.97
802.11ac VHT160	50	5250	12.18	11.79	15
802.11ax HE20	52	5260	18.13	17.78	20.97
	56	5280	17.87	17.51	20.7
	60	5300	18.25	17.98	21.13
	64	5320	15.7	15.4	18.56
802.11ax HE40	54	5270	18.71	18.46	21.6
	62	5310	14.05	13.82	16.95
802.11ax HE80	58	5290	14.11	13.89	17.01
802.11ax HE160	50	5250	12.13	11.85	15

WLAN Conducted Power (Laptop_Full)			
WLAN 5.6GHz Ant 0			
Mode	Channel	Frequency	SISO Ant 0 Avg. Power
802.11a	100	5500	19.87
	116	5580	19.62
	120	5600	19.78
	124	5620	19.85
	132	5660	19.70
	140	5700	19.75
	144	5720	19.74
802.11n HT20	100	5500	19.84
	116	5580	19.84
	120	5600	19.76
	124	5620	19.79
	132	5660	19.76
	140	5700	19.81
	144	5720	19.72
802.11n HT40	102	5510	19.61
	110	5550	19.86
	118	5590	19.73
	126	5630	19.77
	134	5670	19.88
	142	5710	19.77
802.11ac VHT80	106	5530	18.48
	122	5610	19.98
	138	5690	19.99
802.11ac VHT160	114	5570	15.38
802.11ax HE20	100	5500	19.85
	116	5580	19.75
	120	5600	19.83
	124	5620	19.87
	132	5660	19.76
	140	5700	19.72
	144	5720	19.80
802.11ax HE40	102	5510	19.62
	110	5550	19.72
	118	5590	19.76
	126	5630	19.77
	134	5670	19.87
	142	5710	19.81
802.11ax HE80	106	5530	18.26
	122	5610	19.83
	138	5690	19.86
802.11ax HE160	114	5570	15.21

WLAN Conducted Power (Laptop_Full)			
WLAN 5.6GHz Ant 1			
Mode	Channel	Frequency	SISO Ant 1 Avg. Power
802.11a	100	5500	19.75
	116	5580	19.82
	120	5600	19.81
	124	5620	19.83
	132	5660	19.82
	140	5700	19.73
	144	5720	19.71
802.11n HT20	100	5500	19.71
	116	5580	19.84
	120	5600	19.80
	124	5620	19.75
	132	5660	19.88
	140	5700	19.87
	144	5720	19.70
802.11n HT40	102	5510	19.71
	110	5550	19.72
	118	5590	19.81
	126	5630	19.84
	134	5670	19.79
	142	5710	19.70
802.11ac VHT80	106	5530	18.71
	122	5610	19.85
	138	5690	19.99
802.11ac VHT160	114	5570	15.39
802.11ax HE20	100	5500	19.78
	116	5580	19.79
	120	5600	19.73
	124	5620	19.88
	132	5660	19.77
	140	5700	19.74
	144	5720	19.75
802.11ax HE40	102	5510	19.83
	110	5550	19.82
	118	5590	19.87
	126	5630	19.86
	134	5670	19.76
	142	5710	19.79
802.11ax HE80	106	5530	18.57
	122	5610	19.89
	138	5690	19.83
802.11ax HE160	114	5570	15.40

WLAN Conducted Power (Laptop_Full)					
WLAN 5.6GHz Ant 0+1					
Mode	Channel	Frequency	MIMO Ant 0 Avg. Power	MIMO Ant 1 Avg. Power	MIMO Ant 0+1 Avg. Power
[redacted]					
802.11n HT20	100	5500	18.24	18.3	21.28
	116	5580	18.26	18.21	21.25
	120	5600	18.33	18.22	21.29
	124	5620	18.35	18.26	21.32
	132	5660	18.31	18.36	21.35
	140	5700	18.22	18.34	21.29
	144	5720	16.28	16.26	19.28
802.11n HT40	102	5510	17.39	17.87	20.65
	110	5550	17.93	17.93	20.94
	118	5590	17.57	17.78	20.69
	126	5630	17.52	17.98	20.77
	134	5670	19.47	19.48	*22.49*
	142	5710	16.59	16.72	19.67
802.11ac VHT80	106	5530	14.59	14.61	17.61
	122	5610	17.21	17.18	20.21
	138	5690	17.41	17.49	20.46
802.11ac VHT160	114	5570	13.89	13.76	16.84
802.11ax HE20	100	5500	16.54	16.59	19.58
	116	5580	18	18.02	21.02
	120	5600	17.98	18.03	21.02
	124	5620	18.13	18.06	21.11
	132	5660	18.09	18.01	21.06
	140	5700	16.6	16.47	19.55
	144	5720	16.07	16.99	19.56
802.11ax HE40	102	5510	17.64	17.79	20.73
	110	5550	17.63	17.63	20.64
	118	5590	17.72	17.72	20.73
	126	5630	17.64	17.76	20.71
	134	5670	18.44	18.38	21.42
	142	5710	16.64	16.72	19.69
802.11ax HE80	106	5530	14.61	14.53	17.58
	122	5610	17.19	17.12	20.17
	138	5690	17.02	17.03	20.04
802.11ax HE160	114	5570	13.77	13.83	16.81

WLAN Conducted Power (Laptop_Full)			
WLAN 5.8GHz Ant 0			
Mode	Channel	Frequency	SISO Ant 0 Avg. Power
802.11a	149	5745	19.88
	153	5765	19.87
	157	5785	19.86
	161	5805	19.75
	165	5825	19.89
802.11n HT20	149	5745	19.74
	153	5765	19.87
	157	5785	19.74
	161	5805	19.76
	165	5825	19.88
802.11n HT40	151	5755	19.85
	159	5795	19.78
802.11ac VHT80	155	5775	19.98
802.11ax HE20	149	5745	19.89
	153	5765	19.73
	157	5785	19.88
	161	5805	19.80
	165	5825	19.75
802.11ax HE40	151	5755	19.80
	159	5795	19.88
802.11ax HE80	155	5775	19.82

WLAN Conducted Power (Laptop_Full)			
WLAN 5.8GHz Ant 1			
Mode	Channel	Frequency	SISO Ant 1 Avg. Power
802.11a	149	5745	19.87
	153	5765	19.86
	157	5785	19.79
	161	5805	19.88
	165	5825	19.86
802.11n HT20	149	5745	19.80
	153	5765	19.88
	157	5785	19.74
	161	5805	19.79
	165	5825	19.81
802.11n HT40	151	5755	19.88
	159	5795	19.73
802.11ac VHT80	155	5775	19.99
802.11ax HE20	149	5745	19.75
	153	5765	19.71
	157	5785	19.78
	161	5805	19.84
	165	5825	19.87
802.11ax HE40	151	5755	19.71
	159	5795	19.73
802.11ax HE80	155	5775	19.86

WLAN Conducted Power (Laptop_Full)					
WLAN 5.8GHz Ant 0+1					
Mode	Channel	Frequency	MIMO Ant 0 Avg. Power	MIMO Ant 1 Avg. Power	MIMO Ant 0+1 Avg. Power
[redacted]					
802.11n HT20	149	5745	19.77	19.80	22.80
	153	5765	19.76	19.86	22.82
	157	5785	19.81	19.79	22.81
	161	5805	19.77	19.71	22.75
	165	5825	19.75	19.89	22.83
802.11n HT40	151	5755	20.22	19.71	22.98
	159	5795	20.18	19.78	22.99
802.11ac VHT80	155	5775	15.62	15.57	18.61
802.11ax HE20	149	5745	18.01	17.87	20.95
	153	5765	17.98	17.85	20.93
	157	5785	17.98	17.91	20.96
	161	5805	17.86	17.92	20.90
	165	5825	18.00	18.00	21.01
802.11ax HE40	151	5755	18.50	18.35	21.44
	159	5795	18.48	18.42	21.46
802.11ax HE80	155	5775	15.62	15.63	18.64

WLAN Conducted Power (Laptop_Full)			
UNII-5 Ant 0			
Mode	Channel	Frequency	SISO Ant 0 Avg. Power
802.11ax HE160	15	6025	12.99
	47	6185	12.97
	79	6345	12.87

UNII-6 Ant 0			
Mode	Channel	Frequency	SISO Ant 0 Avg. Power
802.11ax HE160	111	6505	**12.89**

UNII-7 Ant 0			
Mode	Channel	Frequency	SISO Ant 0 Avg. Power
802.11ax HE160	143	6665	12.71
	175	6825	**12.74**

UNII-8 Ant 0			
Mode	Channel	Frequency	SISO Ant 0 Avg. Power
802.11ax HE160	207	6985	**12.71**

WLAN Conducted Power (Laptop_Full)			
UNII-5 Ant 1			
Mode	Channel	Frequency	SISO Ant 1 Avg. Power
802.11ax HE160	15	6025	12.98
	47	6185	12.94
	79	6345	12.91

UNII-6 Ant 1			
Mode	Channel	Frequency	SISO Ant 1 Avg. Power
802.11ax HE160	111	6505	12.78

UNII-7 Ant 1			
Mode	Channel	Frequency	SISO Ant 1 Avg. Power
802.11ax HE160	143	6665	12.71
	175	6825	12.72

UNII-8 Ant 1			
Mode	Channel	Frequency	SISO Ant 1 Avg. Power
802.11ax HE160	207	6985	12.73

WLAN Conducted Power (Laptop_Full)					
UNII-5 Ant 0+1					
Mode	Channel	Frequency	MIMO Ant 0 Avg. Power	MIMO Ant 1 Avg. Power	MIMO Ant 0+1 Avg. Power
802.11ax HE160	15	6025	10.49	10.46	13.49
	47	6185	10.47	10.43	13.46
	79	6345	10.46	10.41	13.45

UNII-6 Ant 0+1					
Mode	Channel	Frequency	MIMO Ant 0 Avg. Power	MIMO Ant 1 Avg. Power	MIMO Ant 0+1 Avg. Power
802.11ax HE160	111	6505	10.41	10.43	**13.43**

UNII-7 Ant 0+1					
Mode	Channel	Frequency	MIMO Ant 0 Avg. Power	MIMO Ant 1 Avg. Power	MIMO Ant 0+1 Avg. Power
802.11ax HE160	143	6665	9.69	9.71	12.71
	175	6825	9.71	9.72	**12.73**

UNII-8 Ant 0+1					
Mode	Channel	Frequency	MIMO Ant 0 Avg. Power	MIMO Ant 1 Avg. Power	MIMO Ant 0+1 Avg. Power
802.11ax HE160	207	6985	9.73	9.67	**12.71**

Annex F. SAR and Power Density Test Result

SAR Results for Body Exposure Condition.

Note:
1. SAR testing for WLAN was performed on the maximum power mode.
2. The “< 0.001” means there is no SAR value or the SAR is too low to be measured.

Laptop SAR Test Result

System & Position						DUT & Accessory	SAR							
Plot No.	Band	Mode	Test Position	Separation Distance (mm)	Channel	Ant Status	Duty Cycle	Crest Factor	Max. Tune-up Power (dBm)	Measured Conducted Power (dBm)	Scaling Factor	Power Drift (dB)	Measured SAR-1g (W/kg)	Scaled SAR-1g (W/kg)
	WLAN2.4G	802.11b	Bottom	0	6	Ant 0	99.52	1.00	20.00	19.99	1.00	0	<0.001	0.00
	WLAN2.4G	802.11b	Bottom	0	6	Ant 1	99.52	1.00	20.00	19.99	1.00	0	<0.001	0.00
	WLAN2.4G	802.11n HT20	Bottom	0	6	Ant 0+1	99.50	1.01	23.00	22.80	1.05	0	<0.001	0.00
	WLAN2.4G	802.11n HT20	Bottom	0	1	Ant 0+1	99.50	1.01	19.50	19.39	1.03	0	<0.001	0.00
	WLAN2.4G	802.11n HT20	Bottom	0	11	Ant 0+1	99.50	1.01	19.50	19.46	1.01	0	<0.001	0.00
	WLAN2.4G	802.11n HT20	Bottom	0	12	Ant 0+1	99.50	1.01	11.25	11.17	1.02	0	<0.001	0.00
	WLAN2.4G	802.11n HT20	Bottom	0	13	Ant 0+1	99.50	1.01	11.50	11.45	1.01	0	<0.001	0.00
1	WLAN2.4G	802.11n HT20	Lid Closed Mode	0	6	Ant 0+1	99.50	1.01	23.00	22.80	1.05	-0.04	0.12	0.13
														-
	WLAN5.3G	802.11a	Bottom	0	56	Ant 0	97.15	1.03	20.00	19.97	1.01	0	<0.001	0.00
	WLAN5.3G	802.11n HT40	Bottom	0	54	Ant 1	98.01	1.02	20.00	19.86	1.03	0	<0.001	0.00
	WLAN5.3G	802.11n HT40	Bottom	0	54	Ant 0+1	98.99	1.01	23.00	22.94	1.01	0	<0.001	0.00
	WLAN5.3G	802.11n HT40	Bottom	0	62	Ant 0+1	98.99	1.01	19.50	19.40	1.02	0	<0.001	0.00
2	WLAN5.3G	802.11a	Lid Closed Mode	0	56	Ant 0	97.15	1.03	20.00	19.97	1.01	-0.09	0.323	0.34
														-
	WLAN5.6G	802.11ac VHT80	Bottom	0	138	Ant 0	97.51	1.03	20.00	19.99	1.00	0	<0.001	0.00
	WLAN5.6G	802.11ac VHT80	Bottom	0	138	Ant 1	98.01	1.02	20.00	19.99	1.00	0	<0.001	0.00
	WLAN5.6G	802.11n HT40	Bottom	0	134	Ant 0+1	98.01	1.02	22.50	22.49	1.00	0	<0.001	0.00
	WLAN5.6G	802.11n HT40	Bottom	0	102	Ant 0+1	98.01	1.02	20.50	20.44	1.01	0	<0.001	0.00
	WLAN5.6G	802.11n HT40	Bottom	0	110	Ant 0+1	98.01	1.02	21.00	20.94	1.01	0	<0.001	0.00
	WLAN5.6G	802.11n HT40	Bottom	0	118	Ant 0+1	98.01	1.02	21.00	20.69	1.07	0	<0.001	0.00
	WLAN5.6G	802.11n HT40	Bottom	0	126	Ant 0+1	98.01	1.02	21.00	20.77	1.05	0	<0.001	0.00
	WLAN5.6G	802.11n HT40	Bottom	0	142	Ant 0+1	98.01	1.02	20.00	19.67	1.08	0	<0.001	0.00
3	WLAN5.6G	802.11n HT40	Lid Closed Mode	0	110	Ant 0+1	98.01	1.02	21.00	20.94	1.01	-0.09	0.347	0.36
	WLAN5.8G	802.11ac VHT80	Bottom	0	155	Ant 0	98.01	1.02	20.00	19.98	1.00	0	<0.001	0.00
	WLAN5.8G	802.11ac VHT80	Bottom	0	155	Ant 1	98.01	1.02	20.00	19.99	1.00	0	<0.001	0.00
	WLAN5.8G	802.11n HT40	Bottom	0	159	Ant 0+1	98.99	1.01	23.00	22.99	1.00	0	<0.001	0.00
	WLAN5.8G	802.11n HT40	Bottom	0	151	Ant 0+1	98.99	1.01	23.00	22.98	1.00	0	<0.001	0.00
4	WLAN5.8G	802.11ac VHT80	Lid Closed Mode	0	155	Ant 1	98.01	1.02	20.00	19.99	1.00	-0.07	0.317	0.32
	BT	BDR	Bottom	0	78	Ant 1	77.20	1.30	11.00	10.38	1.15	0	<0.001	0.00
	BT	BDR	Bottom	0	0	Ant 1	77.20	1.30	11.00	9.31	1.48	0	<0.001	0.00
	BT	BDR	Bottom	0	39	Ant 1	77.20	1.30	11.00	9.73	1.34	0	<0.001	0.00
5	BT	BDR	Lid Closed Mode	0	78	Ant 1	77.20	1.30	11.00	10.38	1.15	-0.01	0.00272	0.00

SAR and Power Density Test Result

System & Position						DUT & Accessory	SAR									Power Density								
Plot No.	Band	Mode	Test Position	Separation Distance (mm)	Channel	Ant Status	Duty Cycle	Crest Factor	Max. Tune-up Power (dBm)	Measured Conducted Power (dBm)	Scaling Factor	Power Drift (dB)	Measured SAR-1g (W/kg)	Scaled SAR-1g (W/kg)	Measured APD W/m^2 (4cm^2)	Grid Step [λ]	iPD [W/m2]	Scaling Factor for Measurement Uncertainty	Averaging Area [cm2]	Power Drift [dB]	Normal psPD [W/m2]	Scaled Normal psPD [W/m2]	Total psPD [W/m2]	Scaled Total psPD [W/m2]
	UNII-5	802.11ax HE160	Bottom	0	15	Ant 0	98.10	1.02	13.00	12.99	1.00	0	<0.001	0.00	0			-				-		-
	UNII-5	802.11ax HE160	Bottom	0	15	Ant 1	98.60	1.01	13.00	12.98	1.00	0	<0.001	0.00	0			-				-		-
	UNII-5	802.11ax HE160	Bottom	0	15	Ant 0+1	98.00	1.02	13.50	13.49	1.00	0	<0.001	0.00	0			-				-		-
	UNII-5	802.11ax HE160	Bottom	0	47	Ant 0+1	98.00	1.02	13.50	13.46	1.01	0	<0.001	0.00	0			-				-		-
	UNII-5	802.11ax HE160	Bottom	0	79	Ant 0+1	98.00	1.02	13.50	13.45	1.01	0	<0.001	0.00	0			-				-		-
	UNII-6	802.11ax HE160	Bottom	0	111	Ant 0+1	98.00	1.02	13.50	13.43	1.02	0	<0.001	0.00	0			-				-		-
	UNII-7	802.11ax HE160	Bottom	0	143	Ant 0+1	98.00	1.02	13.50	12.71	1.20	0	<0.001	0.00	0			-				-		-
	UNII-7	802.11ax HE160	Bottom	0	175	Ant 0+1	98.00	1.02	13.50	12.73	1.19	0	<0.001	0.00	0			-				-		-
	UNII-8	802.11ax HE160	Bottom	0	207	Ant 0+1	98.00	1.02	13.50	12.71	1.20	0	<0.001	0.00	0			-				-		-
6	UNII-5	802.11ax HE160	Lid Closed Mode	0	15	Ant 0+1	98.00	1.02	13.50	13.49	1.00	0.06	0.038	0.04	0	0.25	2.85	1.545	4.00	-0.16	0.228	0.36	0.308	0.49
																		-				-		-

Annex G. SAR Measurement Variability

Since all the measured SAR_{1g} are less than 0.8 W/kg, the repeated measurement is not required.

Annex H. Analysis of Simultaneous Transmission SAR and Total Exposure Ratio

// The analysis of simultaneous transmission SAR are shown as below.

<Possibilities of Simultaneous Transmission>

The simultaneous transmission possibilities for this device are listed as below.

Simultaneous TX Combination	Capable Transmit Configurations	Body Exposure Condition
A	WLAN 2.4G_Ant 0 + BT_Ant 1	Yes
B	WLAN 5G_Ant 0 + BT_Ant 1	Yes
C	WLAN 5G_Ant 0+1 + BT_Ant 1	Yes
D	WLAN 6E_Ant 0 + BT_Ant 1	Yes
E	WLAN 6G_Ant 0+1 + BT_Ant 1	Yes

Simultaneous Transmission SAR Evaluation (Laptop)											
Position	1	2	3	4	5	6	A(1+6)	B(2+6)	C(3+6)	D(4+6)	E(5+6)
	WLAN 2.4GHz Ant 0	WLAN 5GHz Ant 0	WLAN 5GHz Ant 0+1	WLAN 6E Ant 0	WLAN 6E Ant 0+1	BT Ant 1	Summimg result 1g SAR W/kg	Summimg result 1g SAR W/kg	Summimg result 1g SAR W/kg	Summimg result 1g SAR W/kg	Summimg result 1g SAR W/kg
	1g SAR W/kg	1g SAR W/kg	1g SAR W/kg	1g SAR W/kg	1g SAR W/kg	1g SAR W/kg					
Bottom	0.00	0.00	0.00	0.00	0.00	0.00	0.00	0.00	0.00	0.00	0.00
Lid Closed Mode	0.00	0.34	0.36	0.00	0.04	0.00	0.00	0.34	0.36	0.00	0.04

Annex I. SAR to Peak Location Separation Ratio Analysis.

Since sum of simultaneous transmission SAR is less than the SAR limit for Body / Head : SAR_{1g} 1.6 W/kg ; Extremity SAR_{10g} 4.0 W/kg. There is no requirement for SAR to Peak Location Separation Ratio Analysis.

Annex J. Calibration of Test Equipment List

Calibration of Test Equipment List are shown as below.

Equipment for SAR Test					
Equipment	Manufacturer	Model	SN	Cal. Date	Cal. Interval
System Validation Dipole	SPEAG	D2450V2	737	Aug. 26, 2021	1 Year
System Validation Dipole	SPEAG	D5GHzV2	1019	Mar. 19, 2021	1 Year
System Validation Dipole	SPEAG	D6.5GHzV2	1008	Sep. 24, 2021	1 Year
System Verification Source	SPEAG	5G Verification Source 10 GHz	1025	Jan. 17, 2022	1 Year
Dosimetric E-Field Probe	SPEAG	EX3DV4	3650	Mar. 26, 2021	1 Year
E-Field Probe	SPEAG	EUmmWV4	9438	Jul. 26, 2021	1 Year
Data Acquisition Electronics	SPEAG	DAE4	861	Apr. 14, 2021	1 Year
Data Acquisition Electronics	SPEAG	DAE4	1689	Nov. 09, 2021	1 Year
Spectrum Analyzer	R&S	FSL6	102006	Apr. 06, 2021	1 Year
Analong Signal Generator	R&S	SMA100B	104417	Oct. 22, 2021	1 Year
Mini-Circuits Wideband Amplifier	Mini-Circuits	ZVA-183-S+	434502031A	Aug. 20, 2021	1 Year
Universal Wireless Test Set	Anritsu	MT8870A/MU887000A	6201699387	Sep. 22, 2021	1 Year
Thermometer	YFE	YF-160A	191100743	Apr. 12, 2021	1 Year
Dielectric Assessment Kit	SPEAG	DAKS-3.5	1151	Jul. 14, 2021	1 Year
Powersource1	SPEAG	SE_UMS_160 BA	4010	Jul. 13, 2021	1 Year

Annex K. Considerations Related to Bluetooth for Setup and Testing

This device has installed Bluetooth engineering testing software which can provide continuous transmitting RF signal. During Bluetooth SAR testing, this device was operated to transmit continuously at the maximum transmission duty with specified transmission mode, operating frequency, lowest data rate, and maximum output power.

The Bluetooth call box has been used during SAR measurement and the EUT was set to **DH5** mode at the maximum output power. Its duty factor was calculated as below and the measured SAR for Bluetooth would be scaled to the 100% transmission duty factor to determine compliance.

The duty factor of Bluetooth signal are shown as below.

<Time-domain plot for Bluetooth transmission signal>

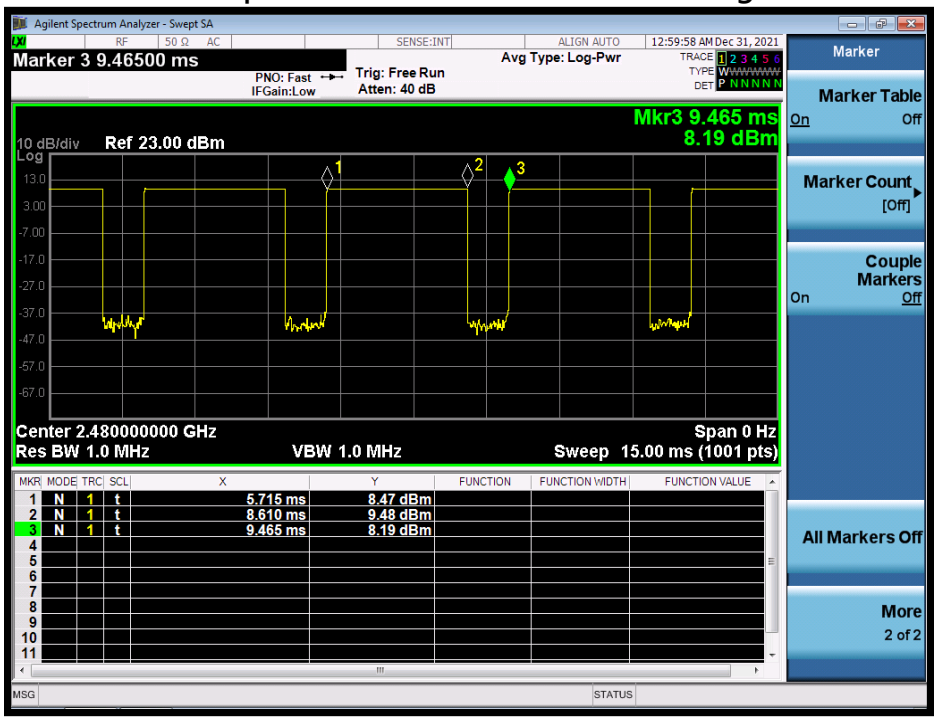

The duty factor of Bluetooth signal has been calculated as following.

Duty Factor = Pulse Width / Total Period = (8.61 - 5.715) / (9.465 - 5.715) = 77.20%