REVISIONS				
REV	ECO NO.	DESCRIPTION	REV BY DATE	APPV BY DATE
02	ECO-272	INITIAL RELEASE	NA	DMZ 3-22-01
03	ECO-321	ADDED CANADA APPROVAL	SWB 7-25-01	DMZ 7-25-01
04	ECO-356	CHANGE C-TIC TO A-TIC	SWB 10-25-01	
		CHANGED CE SYMBOL	SWB 7-9-02	

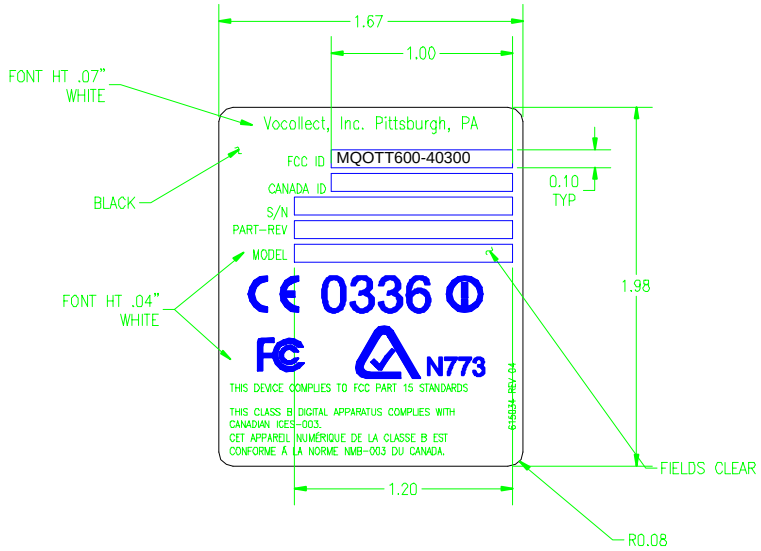

1. THICKNESS NOT TO EXCEED .3mm

SPECIFICATIONS

1.0 PART NUMBER: 615034

2.0 MATERIAL (SEE 2.1 THRU 2.5 BELOW)

2.1 TYPE: BUTLER TECHNOLOGIES .007 DE 7-2 OR EQUIV

2.2 COLOR: BASE: BLACK
NOMENCLATURE: WHITE
FIELDS: CLEAR

2.3 FINISH: MATTE

2.4 ADHESIVE: 3M 467 2MIL OR EQUIV

2.5 MUST CONTAIN NO PARAMAGNETIC SUBSTANCES

3.0 SIZE: AS SHOWN

4.0 FORM: SINGLE W/TAB ON LEFT

5.0 CERTIFICATION: CERTIFICATION IS NOT REQUIRED WITH SHIPMENT, A PACKING LIST WILL SUFFICE PROVIDED IT CONTAINS THE FOLLOWING INFORMATION:

5.1 VOCOLLECT PART NUMBER AND REVISION LEVEL

5.2 PURCHASE ORDER NUMBER

5.3 QUANTITY SHIPPED

5.4 DATE SHIPPED

6.0 SPECIAL CONSIDERATIONS: ANY DEVIATION TO THIS SPECIFICATION WILL NOT BE ACCEPTED WITHOUT WRITTEN APPROVAL FROM VOCOLLECT, INC.

UNLESS OTHERWISE SPECIFIED DIMENSIONS ARE IN INCHES
TOLERANCES ARE:
DECIMALS X ±.1, .XX ±.01, .XXX ±.005
ANGLES X ±.5°, .XX ±.1°

APPROVALS		DATE
DRAWN	S. BERTHOLD	3/22/01
ENG	D. ZATEZALO	3/22/01
MFG	J. BACCI	3/22/01
PURCH	R. WHITAKER	3/22/01
QUAL	M. DAVIS	3/22/01

Vocollect, Inc.
701 ROJI ROAD
PITTSBURGH, PA 15235

LABEL, ZEUS TERMINAL
CLASS B

All technical information, equipment design and application data contained within this document is the CONFIDENTIAL property of VOCOLLECT, INC. No use or disclosure thereof may be made without written permission from VOCOLLECT, INC.

PART NO./ASSEMBLY NO. 615034

SIZE C | DWG NO. 22900062 | REV 04
SCALE: 2:1 | DO NOT SCALE DRAWING | SHEET 1 OF 1