WT-359

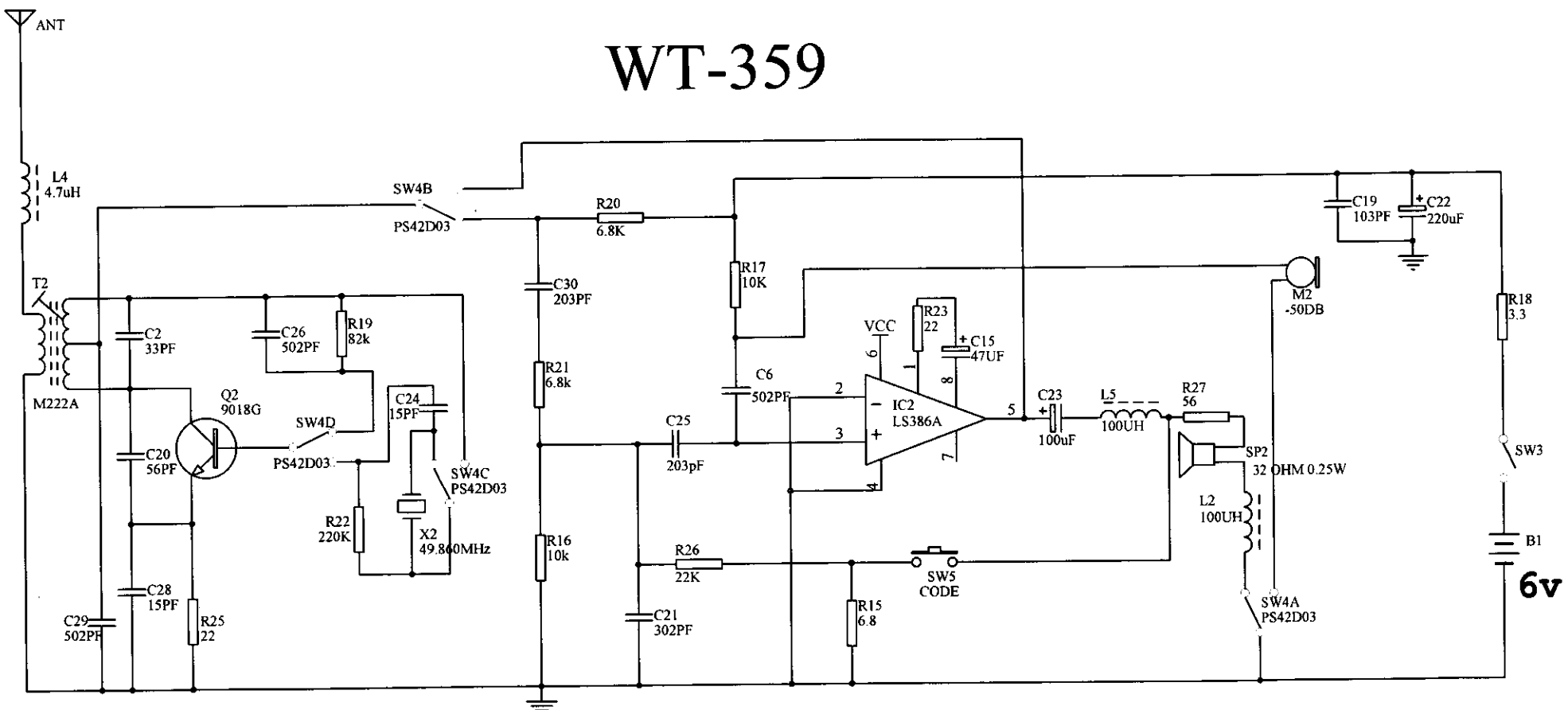

Title		
Size A4	Number	Revision
Date: 31-Dec-2003		Sheet of
File: D:\WT-359.SCH		Drawn By: