WT-356FCC (49.860MHz)

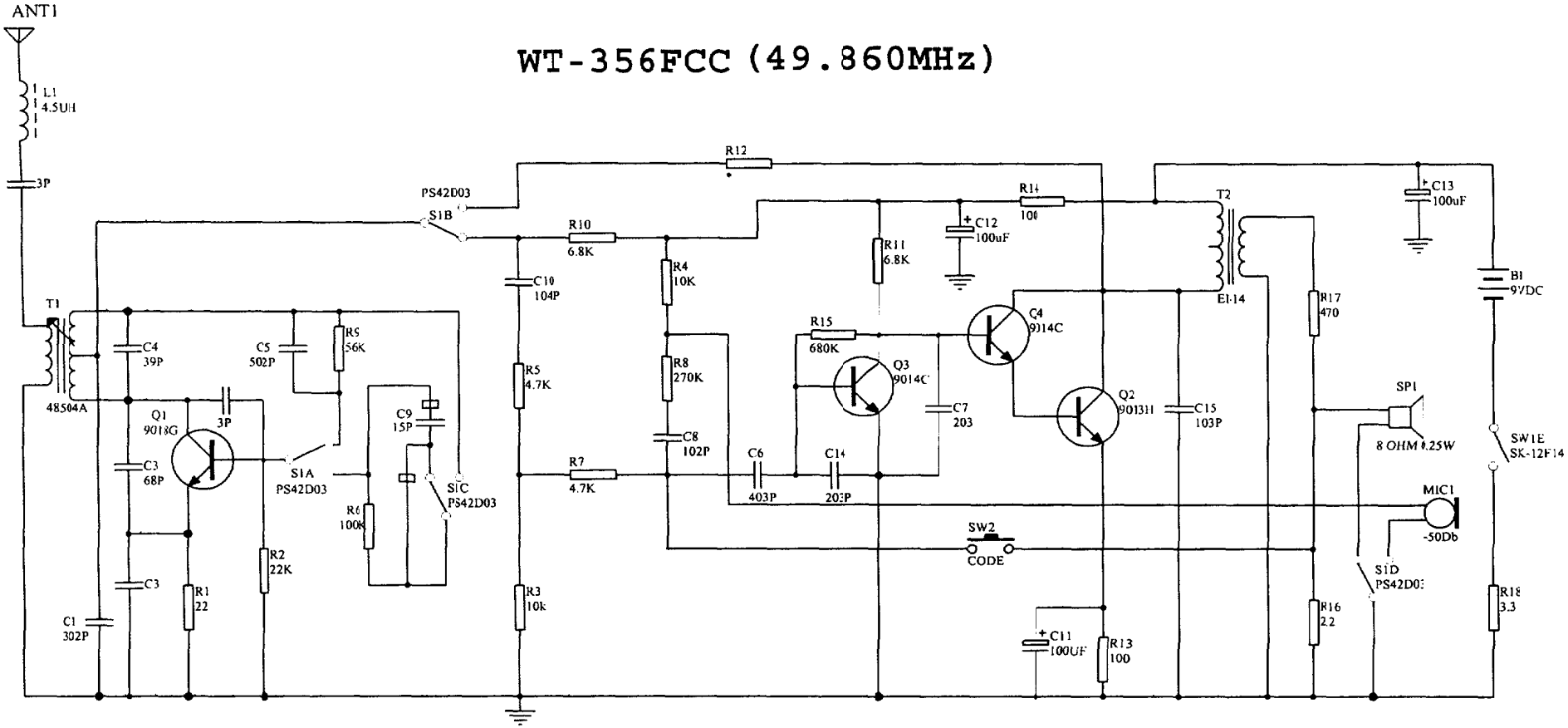

Title		
Size A4	Number	Revision
Date: 12-Apr-2003		Sheet of
File: E:\WT-356.SCH		Drawn By: