# WT-356 block diagram

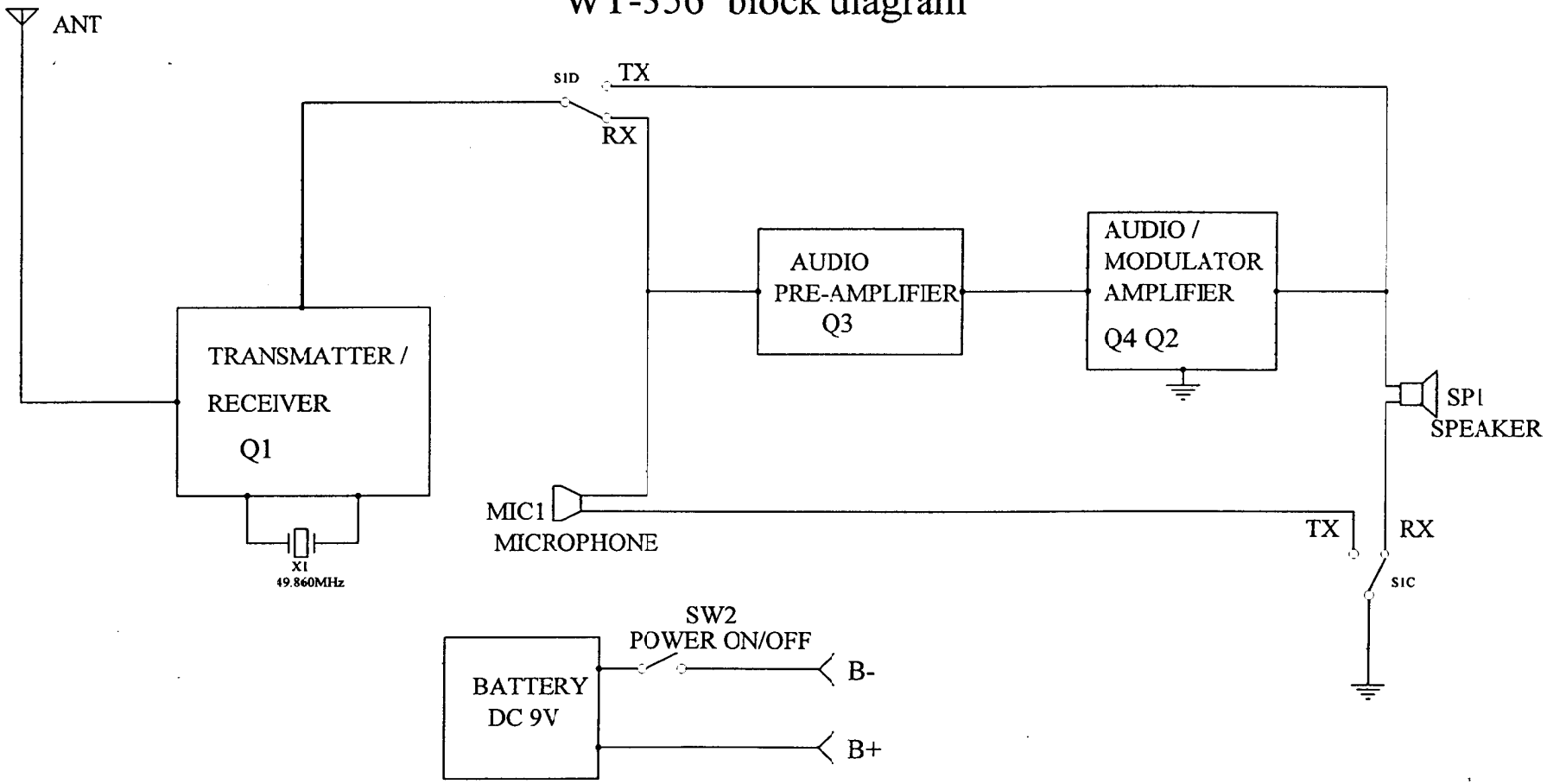


| | | |
|---|---|---|
| Title | | |
| Size A4 | Number | Revision |
| Date: 21-Jan-2003 | | Sheet of |
| File: E:\WT-356~2.SCH | | Drawn By: |