# ※6388 block diagram

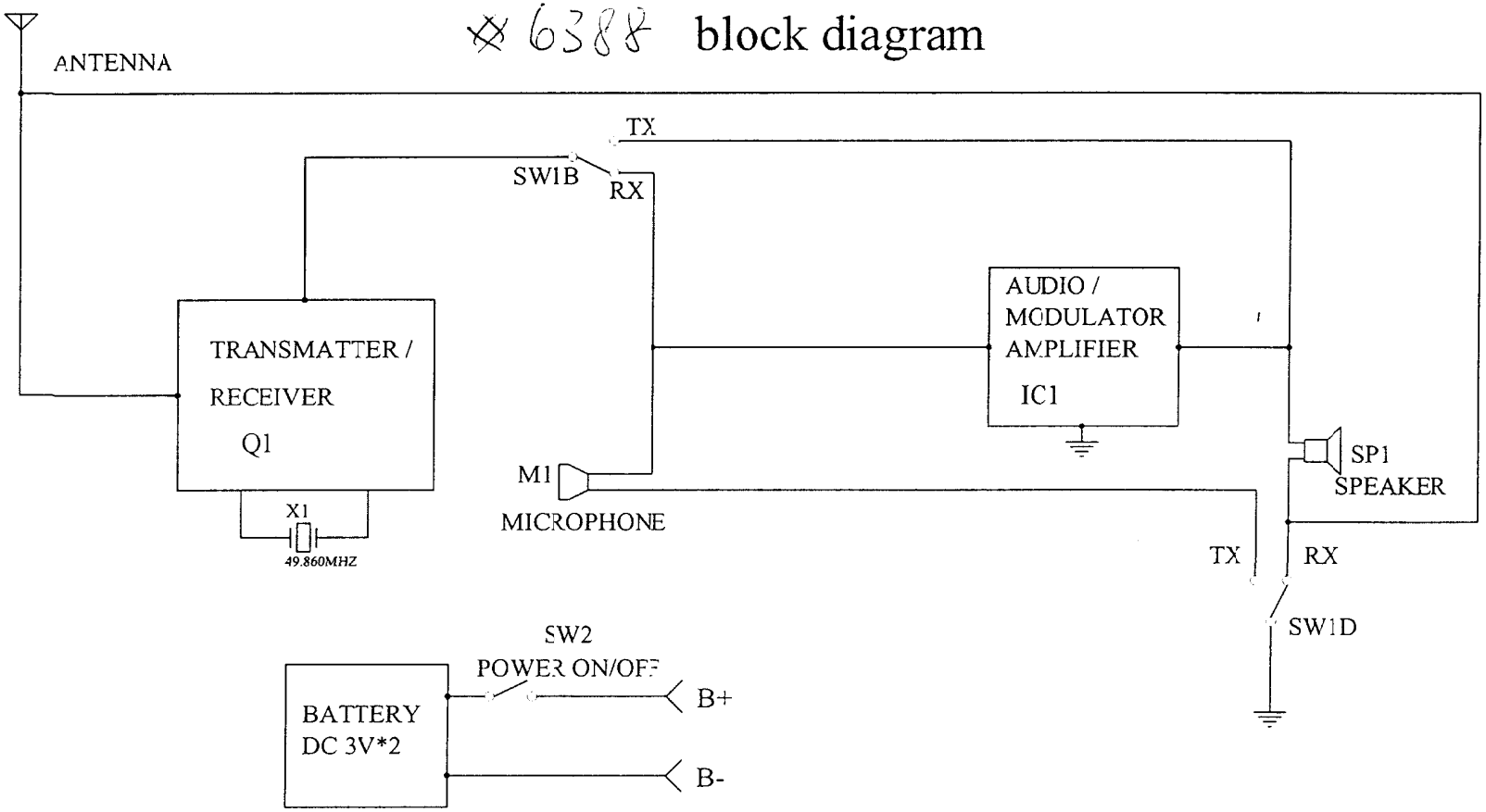


| | | | |
|---|---|---|---|
| Title | Walkie-Talkie | | |
| Size A4 | Number ※6388 | | Revision |
| Date: 21-Dec-2002 | | Sheet of | |
| File: E:\354F.SCH | | Drawn By: | |