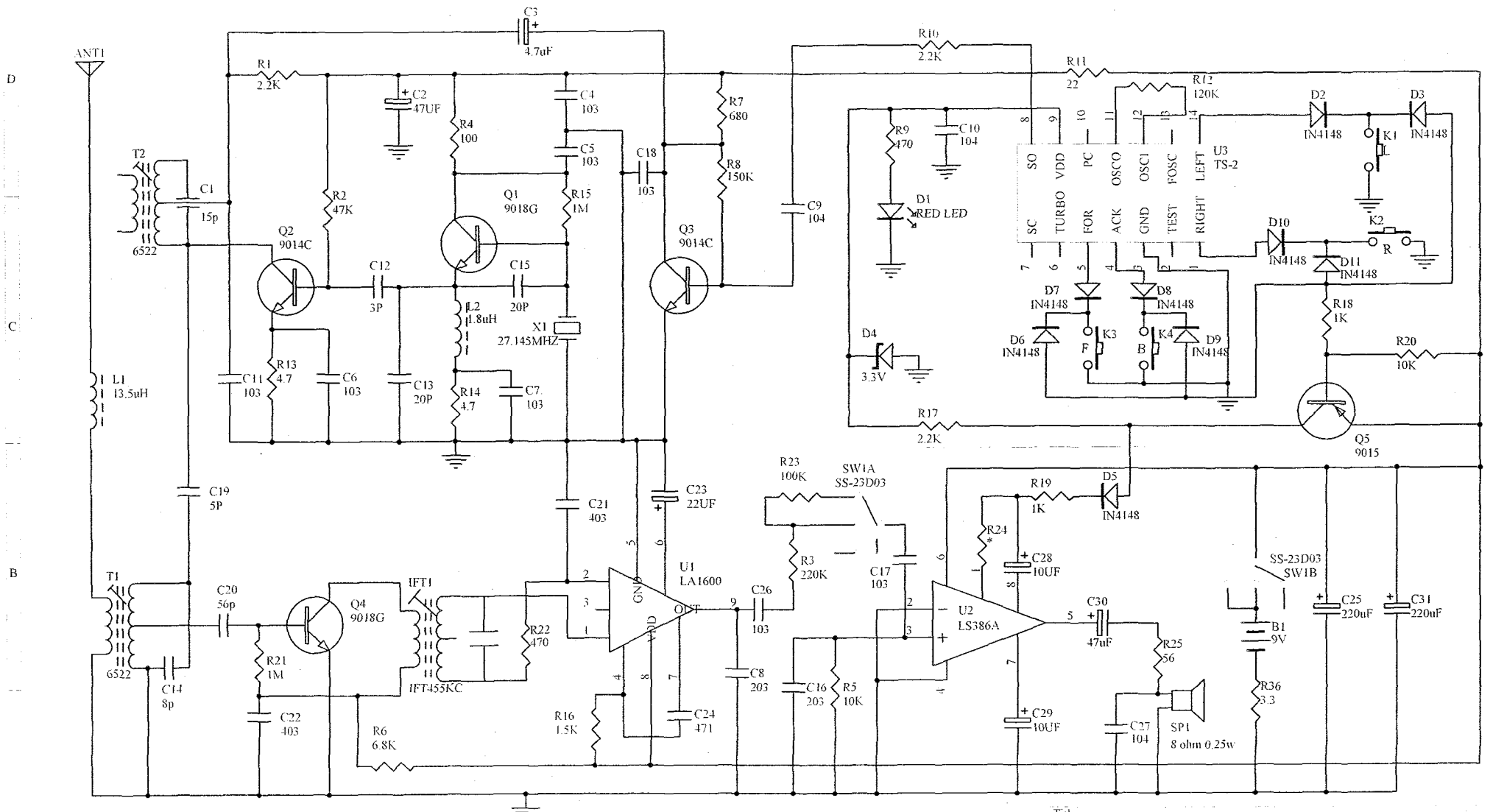

Title

ML-538TX

Size	Number	Revision
A4		
Date: 2-Feb-2004		Sheet of
File: D:\LIFANXIN\ML-538TX.SCH		Drawn By