GMRS G225 BLOCK DIAGRAM

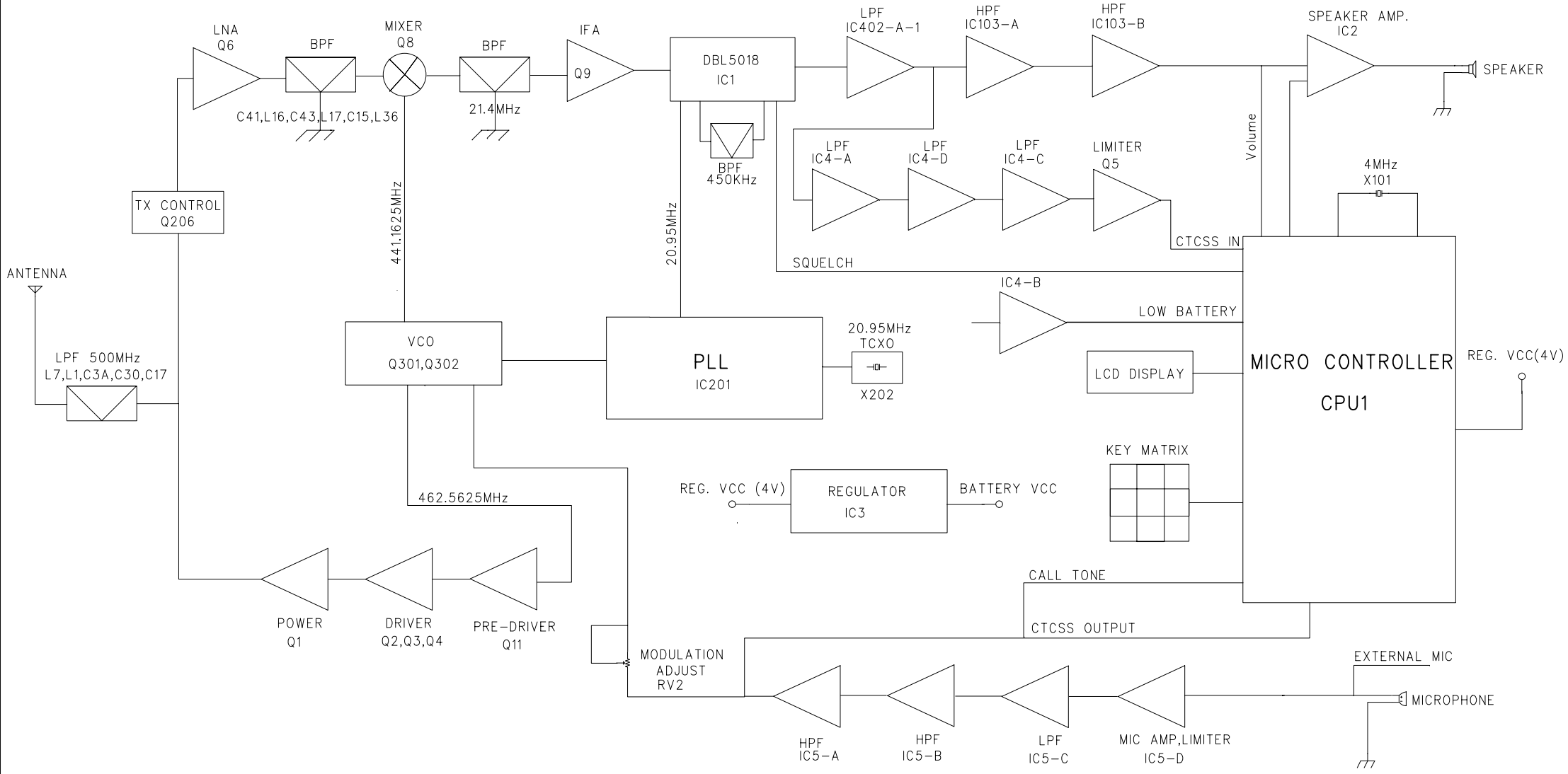

BLOCK DIAGRAM				
Title G225BLK.SCH				
Drawn	Sheet	Drawing No	PCB No	REV 1.0