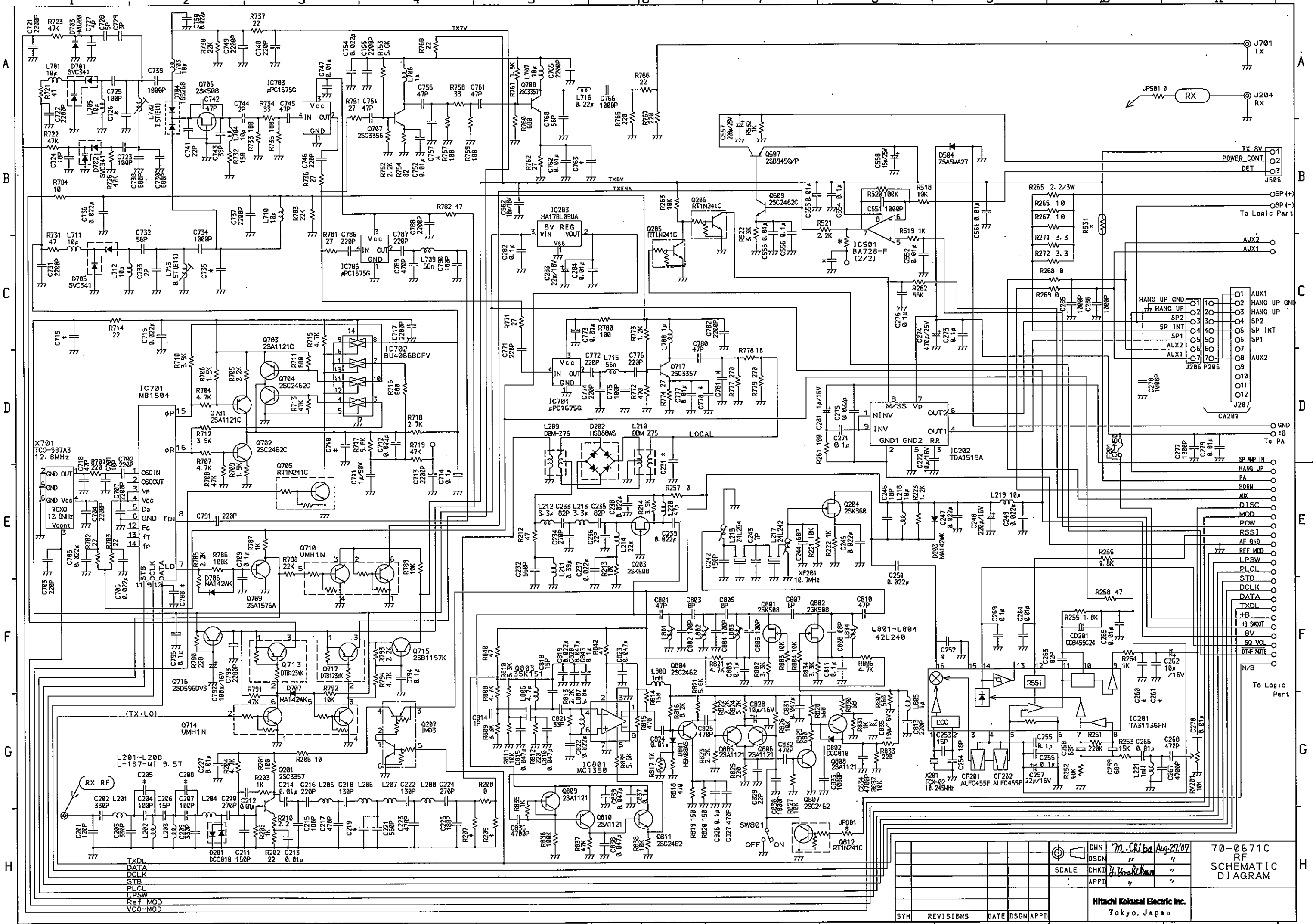
IC701 MB1504
X701 TCO-987A3 12.8MHz
TCXO 12.8MHz
IC702 BU4066BCFV
IC703 μPC1675G
IC704 μPC1675G
IC705 μPC1675G
IC203 HA178L05UA
5V REG
IC501 BA728-F (2/2)
IC202 TDA1519A
IC801 MC1350
IC201 TA31136FN
CD201 CDB455C24
XF201 10.7MHz
X201 FCX-02 10.245MHz
CF201 ALFC455F
CF202 ALFC455F
L801-L804 42L240
L201~L20B L-1S7-MI 9.5T
J701 TX
J204 RX
J506
J206 P206
J207
CA201
TX 8V
POWER CONT
DET
SP (+)
SP (-)
To Logic Part
AUX2
AUX1
HANG UP GND
HANG UP
SP2
SP INT
SP1
GND
+B
To PA
SP AMP IN
PA
HORN
AUX
DISC
MOD
POW
RSSI
AF GND
REF MOD
LPSW
PLCL
STB
DCLK
DATA
TXDL
+B SWOUT
8V
SQ VOL
DTMF MUTE
N/B
TXDL
DATA
DCLK
STB
PLCL
LPSW
Ref MOD
VCO-MOD
RX RF
LOCAL
TX7V
TX8V
TXENA
(TX:LO)
SW801
OFF
ON
DWN M. Chiba Aug.27'07
DSGN
CHKD
APPD
SCALE
SYM REVISIONS DATE DSGN APPD
Hitachi Kokusai Electric Inc.
Tokyo, Japan
70-0671C
RF
SCHEMATIC
DIAGRAM