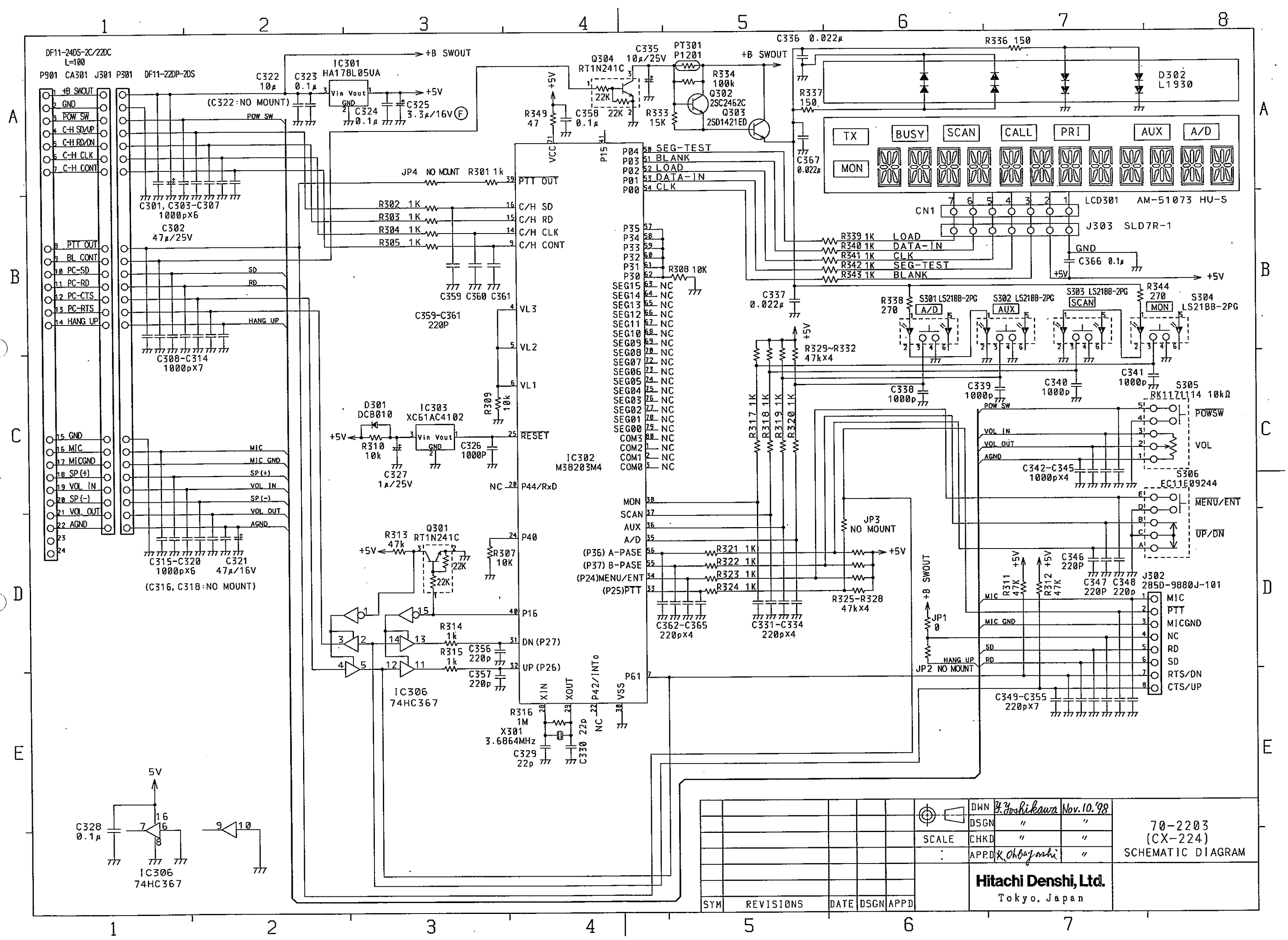
DF11-24DS-2C/22DC
L=100
P901 CA301 J301 P301 DF11-22DP-2DS
+B SWOUT
GND
POW SW
C-H SD/UP
C-H RD/DN
C-H CLK
C-H CONT
PTT OUT
BL CONT
PC-SD
PC-RD
PC-CTS
PC-RTS
HANG UP
MIC
MIC GND
SP(+)
VOL IN
SP(-)
VOL OUT
AGND
C301, C303-C307
1000pX6
C302
47μ/25V
C308-C314
1000pX7
C315-C320
1000pX6
C321
47μ/16V
(C316, C318:NO MOUNT)
IC301
HA178L05UA
C322
10μ
C323
0.1μ
(C322:NO MOUNT)
C324
0.1μ
C325
3.3μ/16V
+5V
JP4 NO MOUNT
R301 1k
R302 1K
R303 1K
R304 1K
R305 1K
C359 C360 C361
C359-C361
220P
IC302
M38203M4
VL3
VL2
VL1
RESET
P44/RxD
P40
P16
DN (P27)
UP (P26)
P61
XIN
XOUT
P42/INT0
VSS
NC
R309
10k
D301
DCB010
IC303
XC61AC4102
R310
10k
C326
1000P
C327
1μ/25V
Q301
RT1N241C
R313
47k
R307
10K
R314
1k
R315
1k
C356
220p
C357
220p
IC306
74HC367
R316
1M
X301
3.6864MHz
C329
22p
C330 22p
5V
C328
0.1μ
IC306
74HC367
Q304
RT1N241C
C335
10μ/25V
PT301
P1201
R334
100k
Q302
2SC2462C
Q303
2SD1421ED
R333
15K
R349
47
C358
0.1μ
22K
VCC
P15
P04 SEG-TEST
P03 BLANK
P02 LOAD
P01 DATA-IN
P00 CLK
P35
P34
P33
P32
P31
P30
R308 10K
SEG15 NC
SEG14 NC
SEG13 NC
SEG12 NC
SEG11 NC
SEG10 NC
SEG09 NC
SEG08 NC
SEG07 NC
SEG06 NC
SEG05 NC
SEG04 NC
SEG03 NC
SEG02 NC
SEG01 NC
SEG00 NC
COM3 NC
COM2 NC
COM1 NC
COM0 NC
MON
SCAN
AUX
A/D
(P36) A-PASE
(P37) B-PASE
(P24)MENU/ENT
(P25)PTT
R321 1K
R322 1K
R323 1K
R324 1K
C362-C365
220pX4
C331-C334
220pX4
JP3
NO MOUNT
R325-R328
47kX4
R329~R332
47kX4
R317 1K
R318 1K
R319 1K
R320 1K
C336 0.022μ
R336 150
R337
150
C367
0.022μ
D302
L1930
TX
BUSY
SCAN
CALL
PRI
AUX
A/D
MON
LCD301 AM-51073 HU-S
CN1
J303 SLD7R-1
R339 1K LOAD
R340 1K DATA-IN
R341 1K CLK
R342 1K SEG-TEST
R343 1K BLANK
GND
C366 0.1μ
C337
0.022μ
R338
270
S301 LS21BB-2PG
S302 LS21BB-2PG
S303 LS21BB-2PG
S304
LS21BB-2PG
R344
270
C338
1000p
C339
1000p
C340
1000p
C341
1000p
S305
RK11711114 10kΩ
POWSW
VOL
S306
EC11E09244
MENU/ENT
UP/DN
C342-C345
1000pX4
R311
47K
R312
47K
C346
220P
C347 C348
220P 220p
J302
285D-9880J-101
MIC
PTT
MICGND
NC
RD
SD
RTS/DN
CTS/UP
JP1
0
JP2 NO MOUNT
C349-C355
220pX7
SCALE
DWN Y.Yoshikawa Nov.10.'98
DSGN " "
CHKD " "
APPD K.Ohbayashi "
SYM REVISIONS DATE DSGN APPD
Hitachi Denshi, Ltd.
Tokyo, Japan
70-2203
(CX-224)
SCHEMATIC DIAGRAM