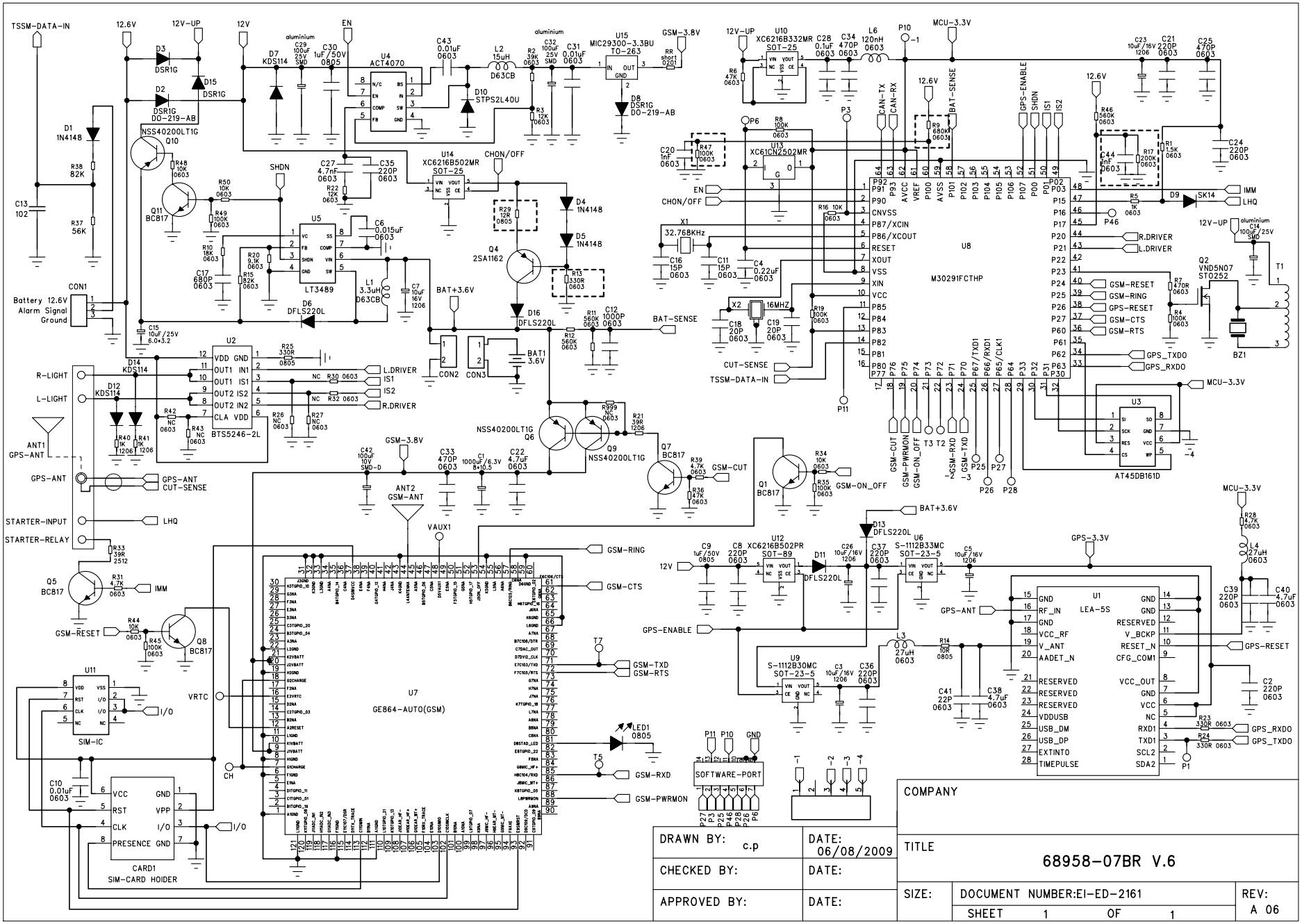
TSSM-DATA-IN
12.6V
12V-UP
12V
EN
GSM-3.8V
MCU-3.3V
U4
ACT4070
U15
MIC29300-3.3BU
TO-263
U10
XC6216B332MR
SOT-25
U13
XC61CN2502MR
U14
XC6216B502MR
SOT-25
U5
LT3489
U8
M30291FCTHP
U2
BTS5246-2L
U3
AT45DB161D
U7
GE864-AUTO(GSM)
U1
LEA-5S
U11
SIM-IC
CARD1
SIM-CARD HOIDER
SOFTWARE-PORT
CON1
Battery 12.6V
Alarm Signal
Ground
R-LIGHT
L-LIGHT
ANT1
GPS-ANT
STARTER-INPUT
STARTER-RELAY
LHQ
IMM
GSM-RESET
GSM-RING
GSM-CTS
GSM-TXD
GSM-RTS
GSM-RXD
GSM-PWRMON
GSM-CUT
GSM-ON_OFF
GPS-ENABLE
GPS-RESET
GPS-RXDO
GPS-TXDO
GPS-3.3V
BAT+3.6V
BAT-SENSE
CUT-SENSE
CHON/OFF
SHDN
VAUX1
VRTC
CH
I/O
LED1
0805
R.DRIVER
L.DRIVER
IS1
IS2
GSM-RESET
GSM-RING
GSM-CTS
GSM-RTS
GSM-RXD
GSM-TXD
GSM-PWRMON
GSM-CUT
GSM-ON_OFF
GSM-PWRMON
GSM-TXD
GSM-RXD
P11
P10
GND
P27
P3
P25
P46
P28
P26
P6
COMPANY
DRAWN BY: c.p
DATE: 06/08/2009
CHECKED BY:
DATE:
APPROVED BY:
DATE:
TITLE
68958-07BR V.6
SIZE:
DOCUMENT NUMBER:EI-ED-2161
REV: A 06
SHEET 1 OF 1