REV	DESCRIPTION	DATE	NAME
A1	NEW RELEASE	03/09/2021	LYC

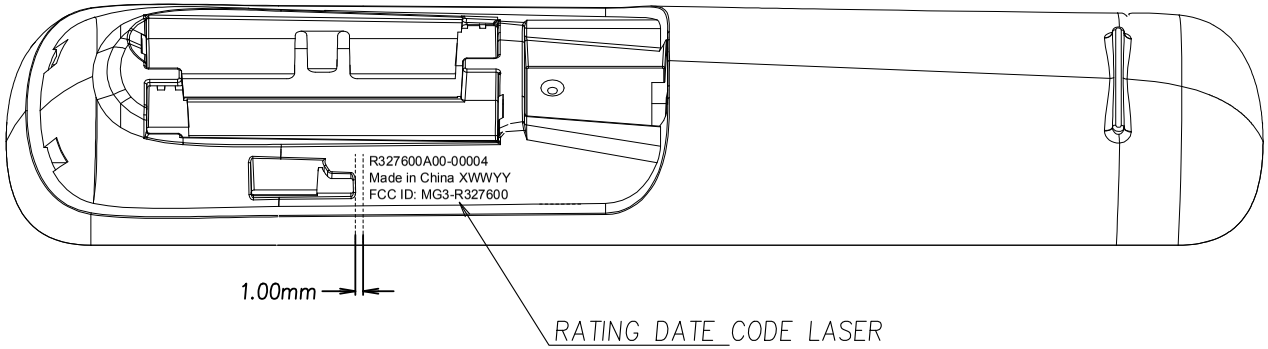

NOTE:
1,LASER ETCH GUIDELINES
FONT FAMILY: ROBOTO CONDENSED
FONT STYLE:REGULAR
FONT SIZE:5 PT
LEADING:4.5 PT
PARAGRAPH:ALIGN LEFT
REFER TO DOTTED RED LINES FOR ALIGAMENT AND DIMENSIONS (IF SPECIFIED) FOR SPACING.
2. FORMAT:

R327600A00-00004
Made in China XWWYY

- LAST TWO DIGITS OF YEAR PRODUCED.
- WEEK # OF YEAR PRODUCED.
- REFER TO LIST OF FACTORY CODE TABLE

FCC ID: MG3-R327600

	FACTORY CODE TABLE
Code	Factory
A	UEY(Yangzhou)
B	iTon
D	Jye Tai
E	Ewig
F	Funide
G	G-Light Technologies Co.,Ltd
H	Tatung
J	Jetta
K	Guangdong Seneasy Intelligent Tech
L	Moterrey,Mexico(UEM)
N	Bescon Electronics
P	Philips Singapore
Q	GTQ(Qinzhou)
R	Rework(Crane)
T	VNPT (Vietnam
U	Universal Electronics
V	Vision Automobile Electronics Industrial Co.,Ltd
W	Jebsee Electronics Co.,LTD
Y	GTY(Yangzhou)

LINEAR TOLERANCE	
< 6	± 0.05
6 ~ 30	± 0.07
30 ~ 120	± 0.10
120 ~ 315	± 0.15
> 315	± 0.20
ANGULAR TOLERANCE	
< 5°	±0.25°
5° ~ 15°	±0.5°
> 15°	±1.0°
BE Cp / Cpk DIMENSION	
BE CRITICAL DIMENSION	

GEMSTAR TECHNOLOGY (QINZHOU) CO.,LTD.
(WHOLLY OWNED BY C.G. DEVELOPMENT LTD.)

DRAW	DATE	TITLE: RATING DATE CODE LASER
CHKD.	DATE	
APPD.	DATE	MATERIAL
MODEL: LATAM AMERICA MOVIL CERVINO 2021		DWG NO: CG-78727 REV: A1
P/N		SIZE A4 SCALE 1:1 SHEET 1 OF 1