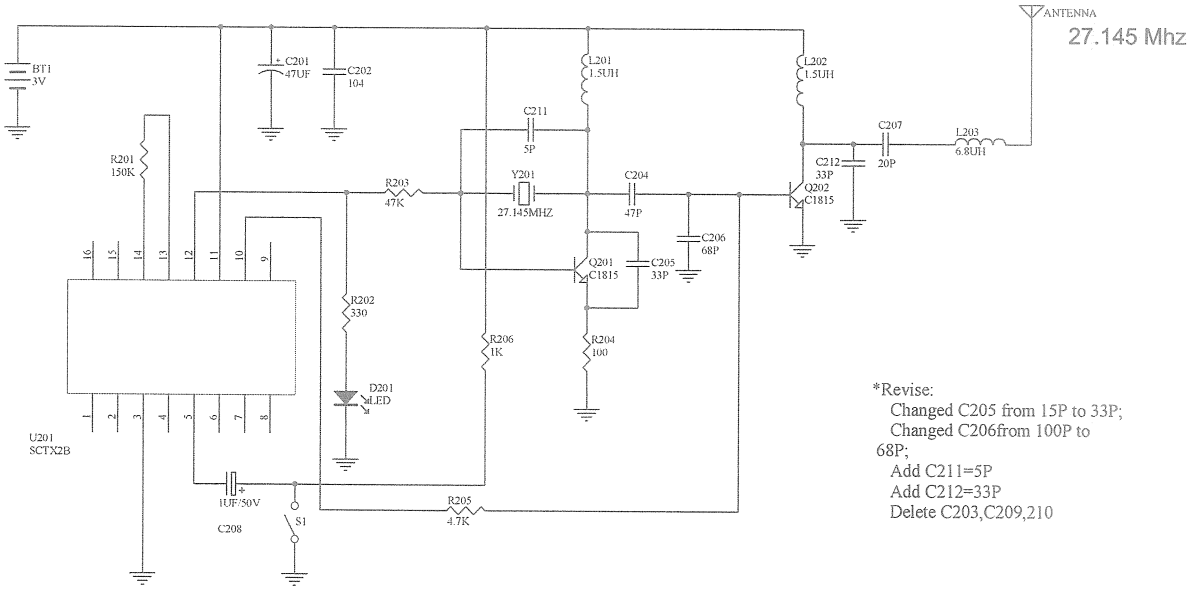

*Revise:
Changed C205 from 15P to 33P;
Changed C206from 100P to 68P;
Add C211=5P
Add C212=33P
Delete C203,C209,210

Company:	MASTER LEADER INTERNATIONAL LTD				
Model No:	000786	IC Type:	SCTX2B	Size:	B
Date:	2008/04/24	Version:	08	Sheet:	1of 1
Drawn:	JunYi Liu	Check:		Approval:	