SERVICE DRG. No.	SHEET No OF	© 2001 DYNEX

3rd ANGLE PROJECTION — DO NOT SCALE — IF IN DOUBT ASK

USED ON

SECURITY CLASSIFICATION

THIS DRAWING HAS BEEN PREPARED USING AUTOCAD 2000 SOFTWARE INSTALLED 09/08/99

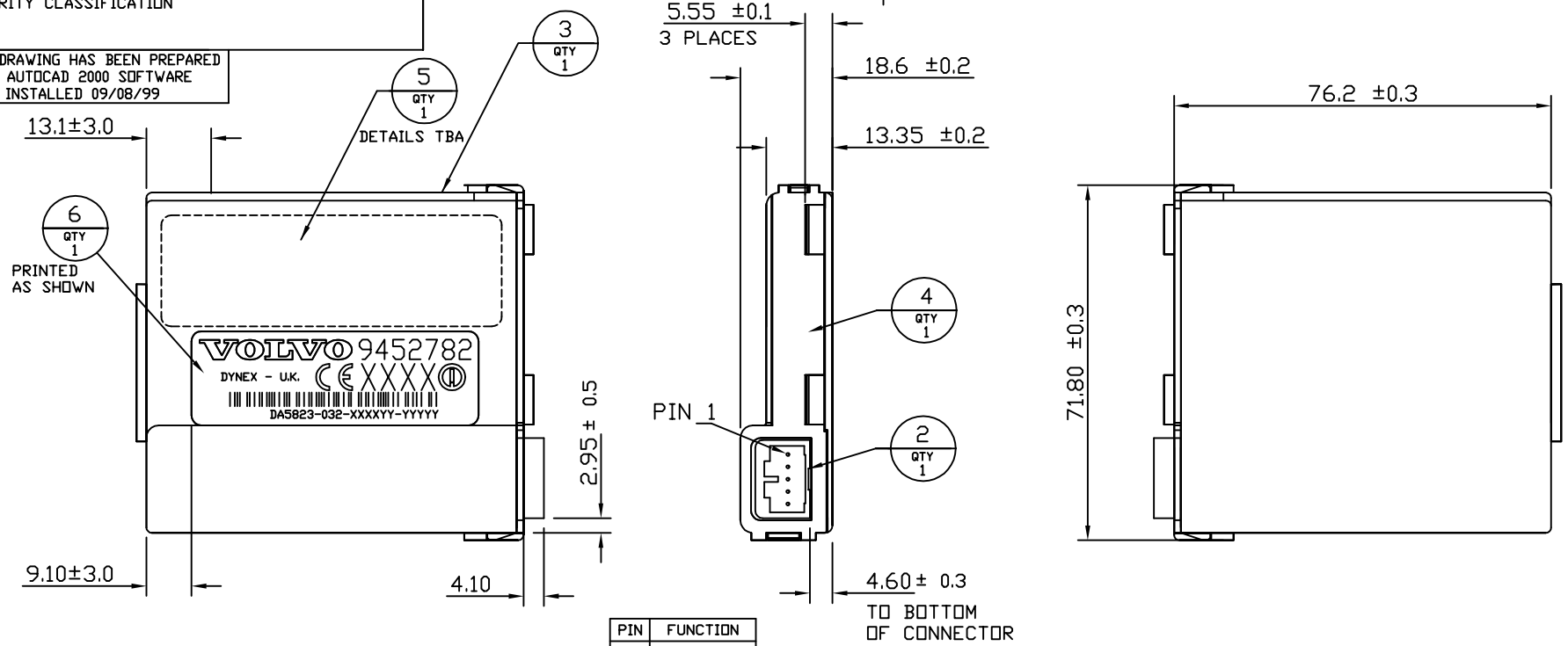

PIN	FUNCTION
1	+ 12V
2	N/C
3	O/P PROG
4	N/C
5	GND

SPECIFICATION REQUIREMENTS AT 25±10°C

SUPPLY:- +12 ± 0.5 VOLTS
POWER:- -5 TO +5dB
CURRENT:- 2.7mA MAX (10mA PEAK)
FREQUENCY:- 2448MHz TO 2452MHz
SENSITIVITY:- 15.3 TO 16.7dB AT GAIN STEP 40
TRIGGER PULSE:- 1000±100mS ADDRESS '0'

ITEM	DRAWING/PART No	TITLE/N.S.N.	QTY OFF	REMARKS
6	29001090	LABEL BLANK	1	
5	TBA	LABEL - PTT	1	
4	29001315	CASE END	1	
3	29001314	CASE BODY	1	
2	A0497	ASSEMBLY STAGE 2	1	
1	A0501	ASSEMBLY FINAL	A	

ISS	DATE	DESCRIPTION	APPD
3	21/1/02	POWER, SENSITIVITY & TRIGGER PULSE SPECS ADDED.	PC
		CURRENT WAS 4mA PEAK. 032 WAS B32. DCR11613	
2	3/8/01	FULL RELEASE DCR11206	
1	25-6-01	NEW DRG ISSUED TO VOLVO AS DRAFT COPY	

CHANGES

INITIAL ISSUE	1
DATE	25-6-01
Q.A. APP'D	J TOWNSEND 2/8/01
PROC APP'D	
PROD. APP'D	N McDONNELL 2/8/01
DES. APP'D	P CARTER 24/7/01
D.O. CHECK	M HOBDEN 24/7/01
DRAWN	D FARLEY 25/6/01

ISSUED BY LINCOLN D.O.
ISSUE TO

MATERIAL

FINISH

SURFACE TEXTURE

ALL DIMENSIONS IN MILLIMETRES UNLESS OTHERWISE STATED

UNLESS OTHERWISE STATED THE FOLLOWING TOLERANCES APPLY TO ALL DIMENSIONS

DRAWN TO B.S. 308

SCALE 1:1

DYNEX SEMICONDUCTOR

TITLE ASSEMBLY FINAL

N.S.N.

DEVICE DA5823-032

MOD ESTABLISHMENT

RESPONSIBLE AUTHORITY

SECURITY CLASSIFICATION
COMMERCIAL IN CONFIDENCE

DYNEX DRG No
A0501

CONTROLLED ONLY WITH RED Q.A.D.C. STAMP

SHEET No 1 OF 1

A3