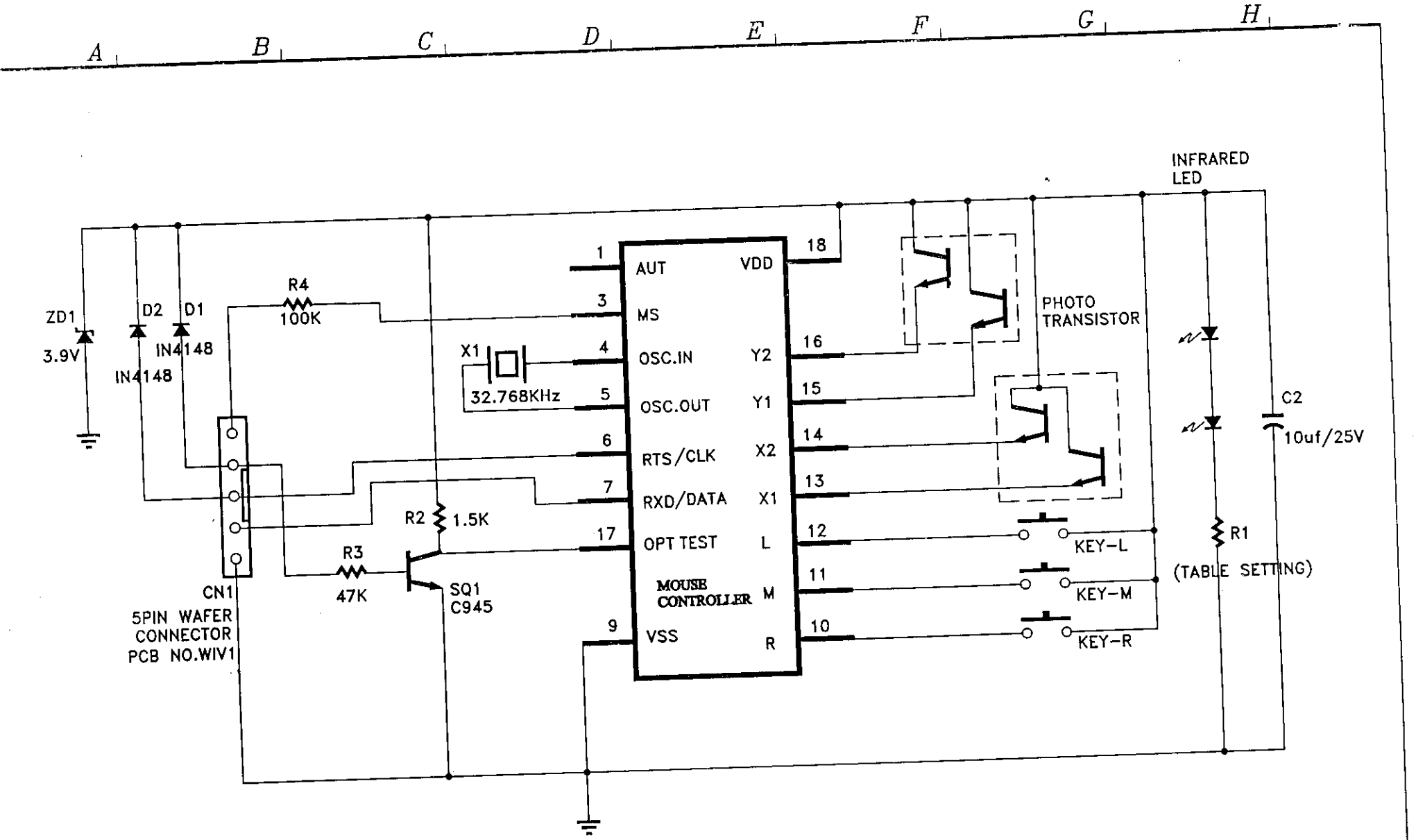

IISpirit	DR.	Jason	SCALE	1:1	TITLE	MOUSE FOR COMBINE (SERIAL OR PS/2)			5		
	CHK.	Arno	SHEET	1/1	MATERIAL		PART NO.		4		
DEL NO. EIV1	APP.		UNIT	mm	FINISH		DWG. NO.	EIV1.dwg	3		
									2		
									1		
									NO	DATE	ECN. NO.