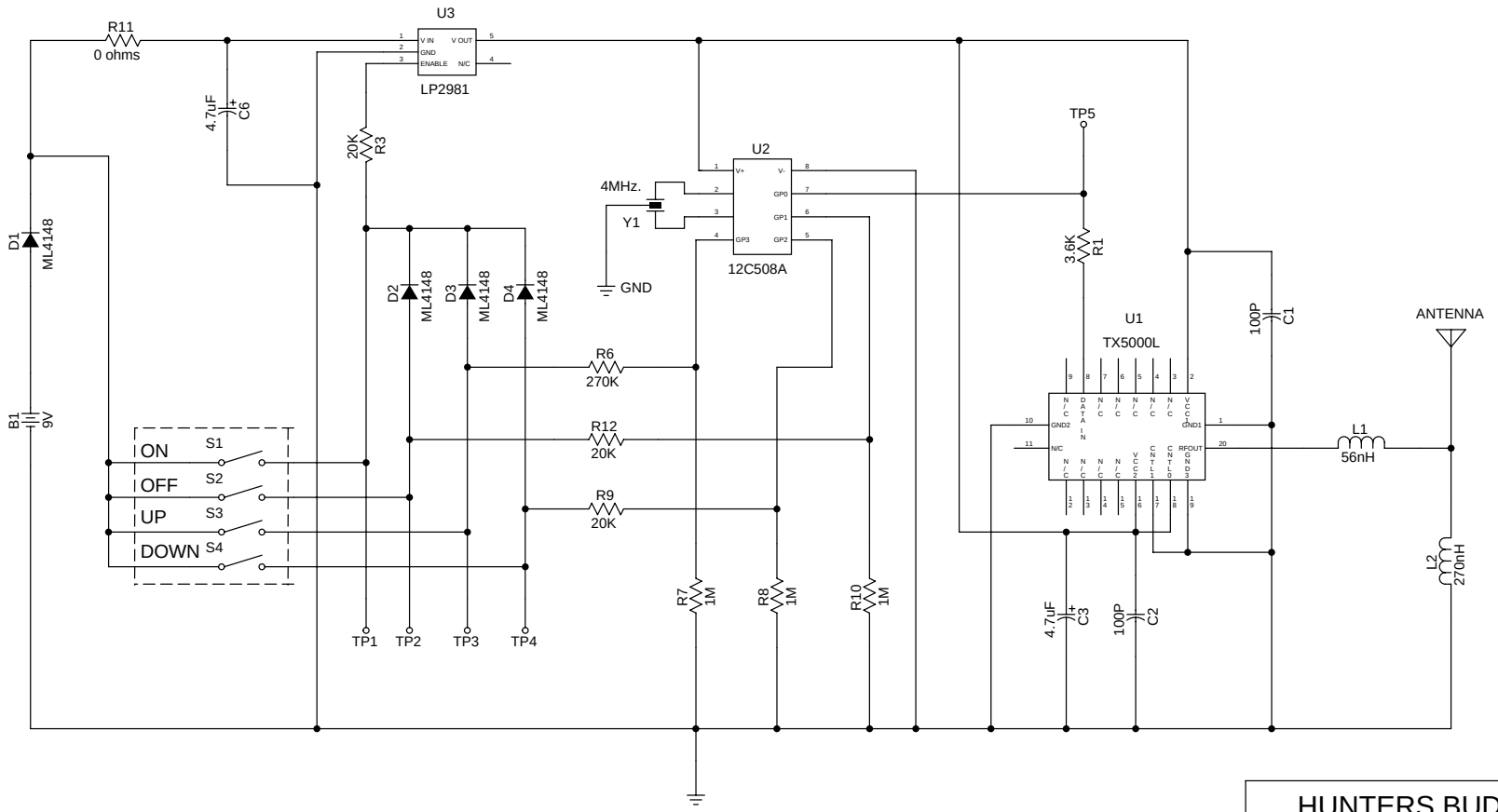

HUNTERS BUDDY

Title	SCHEMATIC		
Size B	Number HBTX-2		Rev D
Date 9-AUG-01		Drawn by BR	
Filename hbtx-2.S01		Sheet 1 of 1	