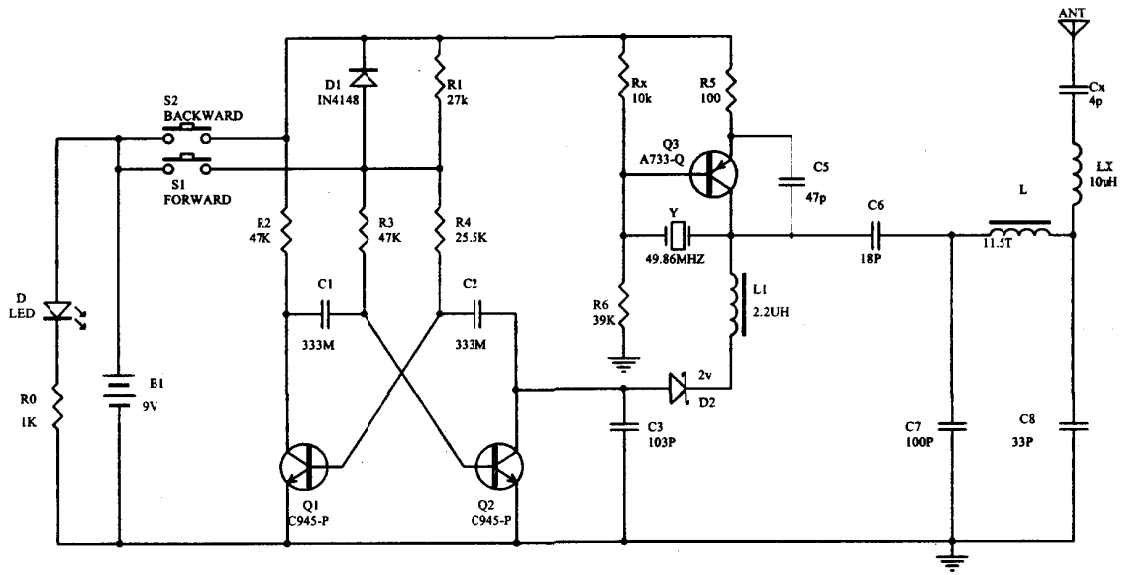

1:32 49MHZ Transmitter circuit diagram.

Title:	1:32发射线路图(49M)		CHKD BY:
Size: A4		Revision:	DRAWN BY: 骆中伟
File	Date: 04-03-23	Sheet of:	