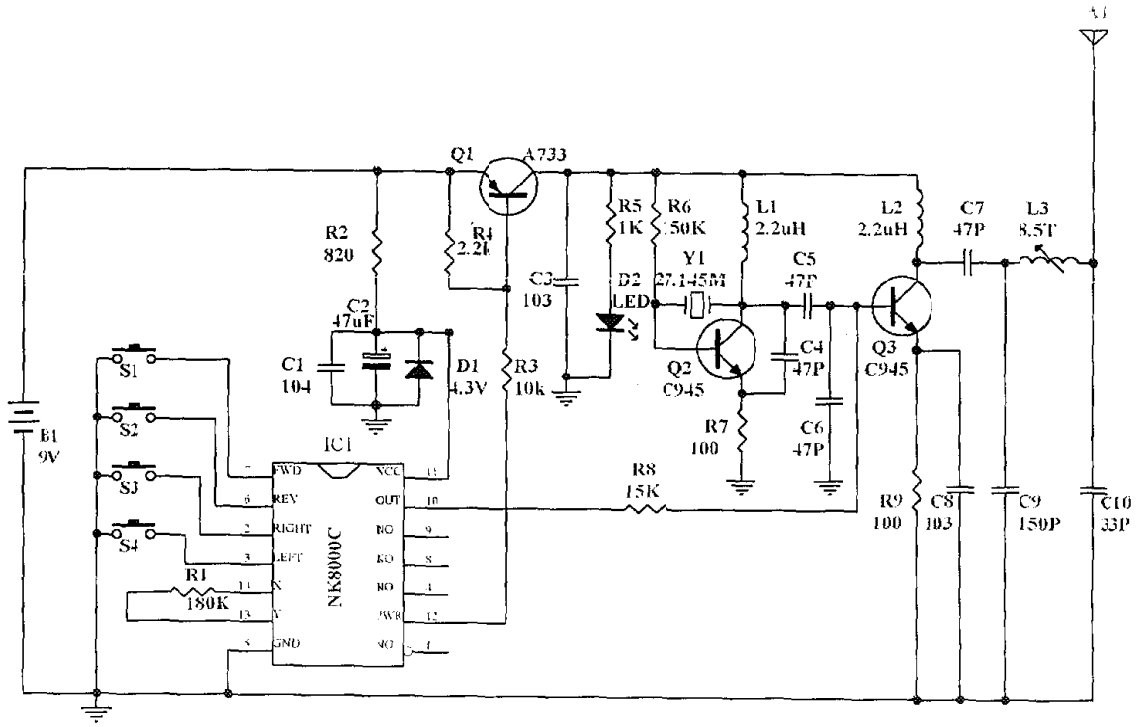

Y	L1	L2	C4	C5	C6	C7	C9	C10
27.145M	2.2uH	2.2uH	47P	47P	47P	47P	150P	67P
40.685M	1.0uH	1.0uH	39P	27P	47P	27P	47P	10P
49.860M	1.0uH	1.0uH	33P	22P	39P	22P	39P	5P

Title

Size: A4 | Number: 1 | Revision: A

File: [illegible] | Date: 5-Feb-2001 | Time: [illegible] | Sheet 1 of 1

APPROVALS	
APPRD BY:	
CHKD BY:	
DRAWN BY:	

NKT