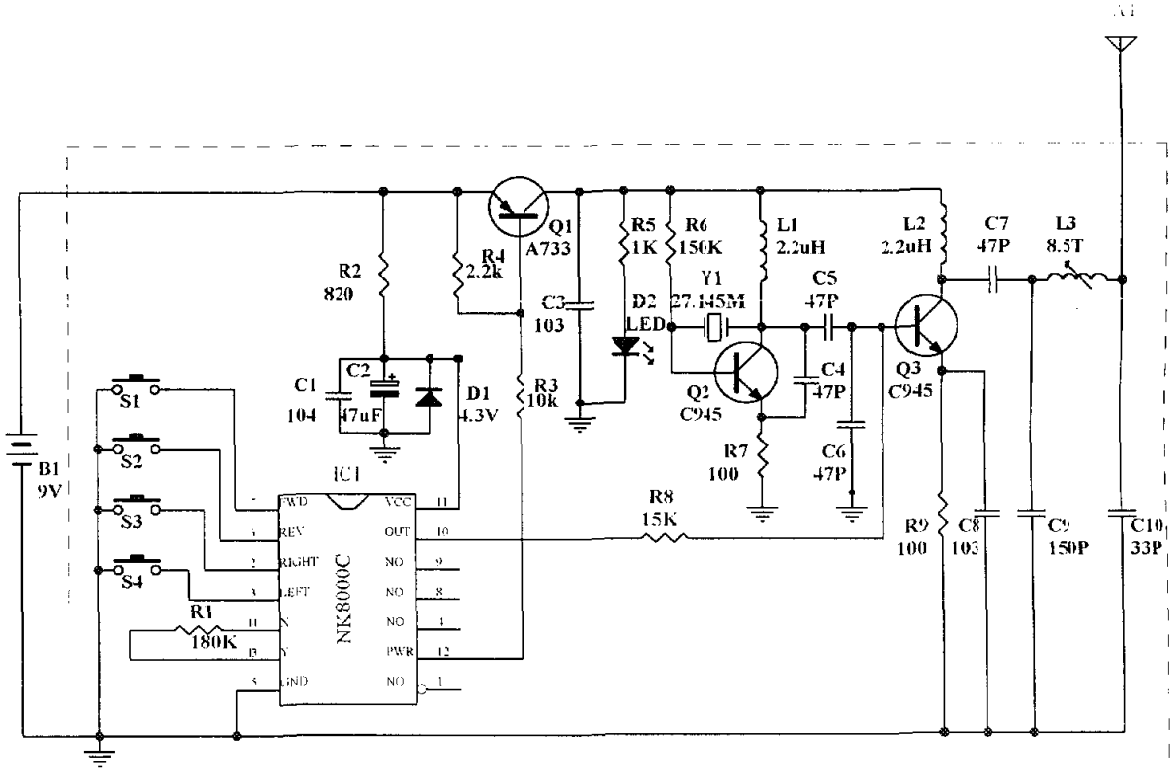

Y	L1	L2	C4	C5	C6	C7	C9	C10
27.145M	2.2uH	2.2uH	47P	47P	47P	47P	150P	67P
40.685M	1.0uH	1.0uH	39P	27P	47P	27P	47P	10P
49.860M	1.0uH	1.0uH	33P	22P	39P	22P	39P	5P

Title: 3250D 摇控船发射机原理图

Size: A4 | Number | Revison: A

Date: 16-Feb-200 | Sheet of 1

File: D:\DATA\FAN\EP01602.SC | Dawn By: 付江南