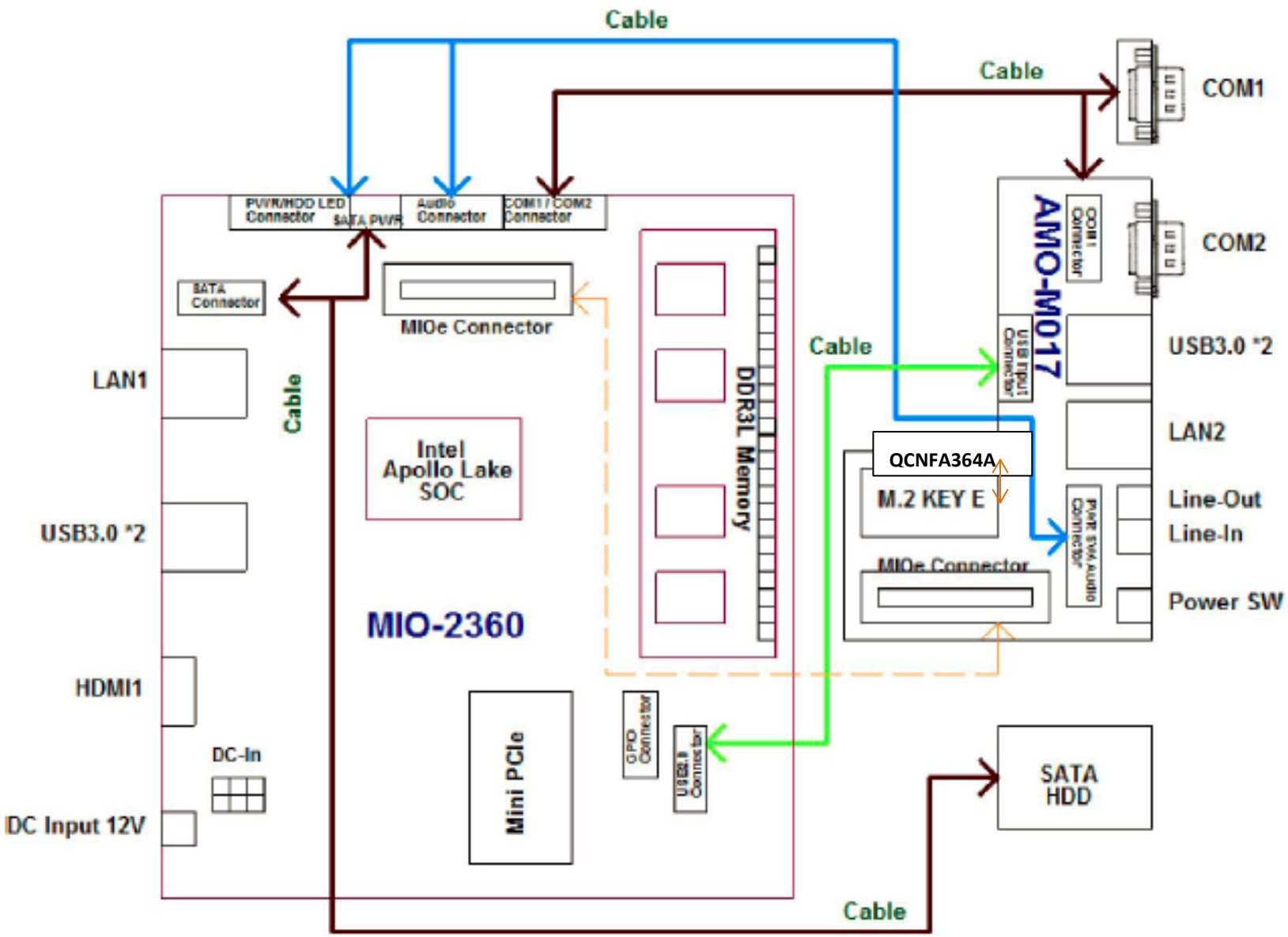FCC ID: M82-ARK1124