SOC:DISPLAY&CAMERA

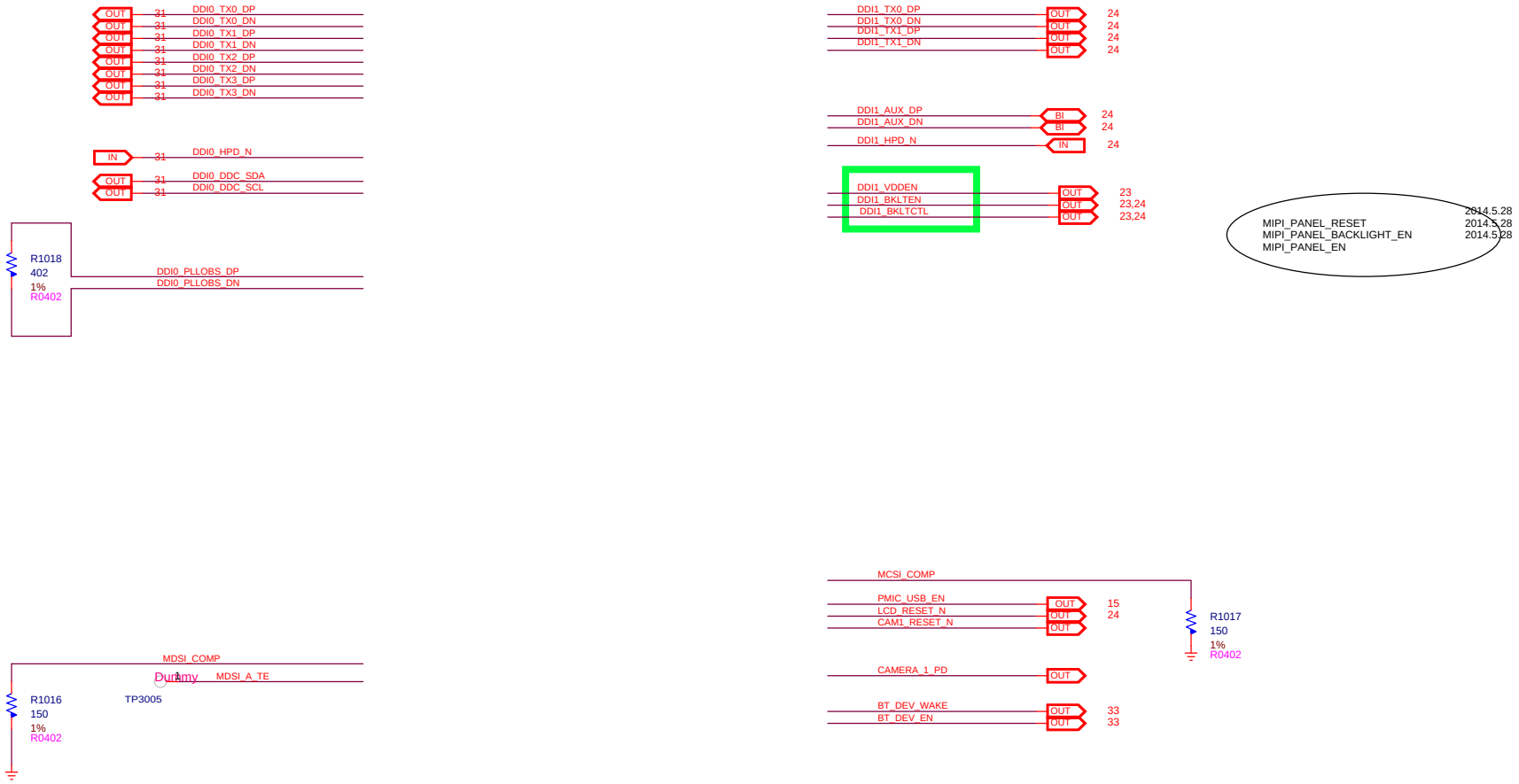

Title	04_SOC_ DISPLAY & CAMERA		
Size Custom	Document Number		Rev V1.0
Date: Friday, September 25, 2015	Sheet 4 of 41		

SOC:STORAGE/I2S

2015.7.2

EMMC_RESET_N

C1057
Dummy 0.1uF/NC
X7R
10V
C0402

OUT 20 EMMC_CLK

BI 20 EMMC_DATA_0
BI 20 EMMC_DATA_1
BI 20 EMMC_DATA_2
BI 20 EMMC_DATA_3
BI 20 EMMC_DATA_4
BI 20 EMMC_DATA_5
BI 20 EMMC_DATA_6
BI 20 EMMC_DATA_7

BI 20 EMMC_CMD
OUT 20 EMMC_RESET_N

EMMC_RCOMP

R1021
49.9
1%
R0402

SDIO2_CLK_W

BI 33 SDIO2_DATA_0
BI 33 SDIO2_DATA_1
BI 33 SDIO2_DATA_2
BI 33 SDIO2_DATA_3
BI 33 SDIO2_CMD

2015.7.2

OUT 33 SDIO2_CLK R9619 0 SDIO2_CLK_W

SDMMC3_RCOMP

R1020
49.9
1%
R0402

1 Dummy TP1063

AUDIO_RCOMP

I2S_0_CLK_A
I2S_0_FS BI 27
I2S_0_TXD OUT 27
I2S_0_RXD IN 27

I2S_1_CLK BI 27,33
I2S_1_FS BI 27,33
I2S_1_TXD OUT 27,33
I2S_1_RXD IN 27,33

R1022
49.9
1%
R0402

1 Dummy TP1064

2015.7.2

I2S_0_CLK_A R9618 0 I2S_0_CLK OUT 27

Title	05_SOC_ STORAGE & I2S	
Size Custom	Document Number	Rev V1.0
Date: Friday, September 25, 2015	Sheet 5 of 41	

SOC:USB/I2C

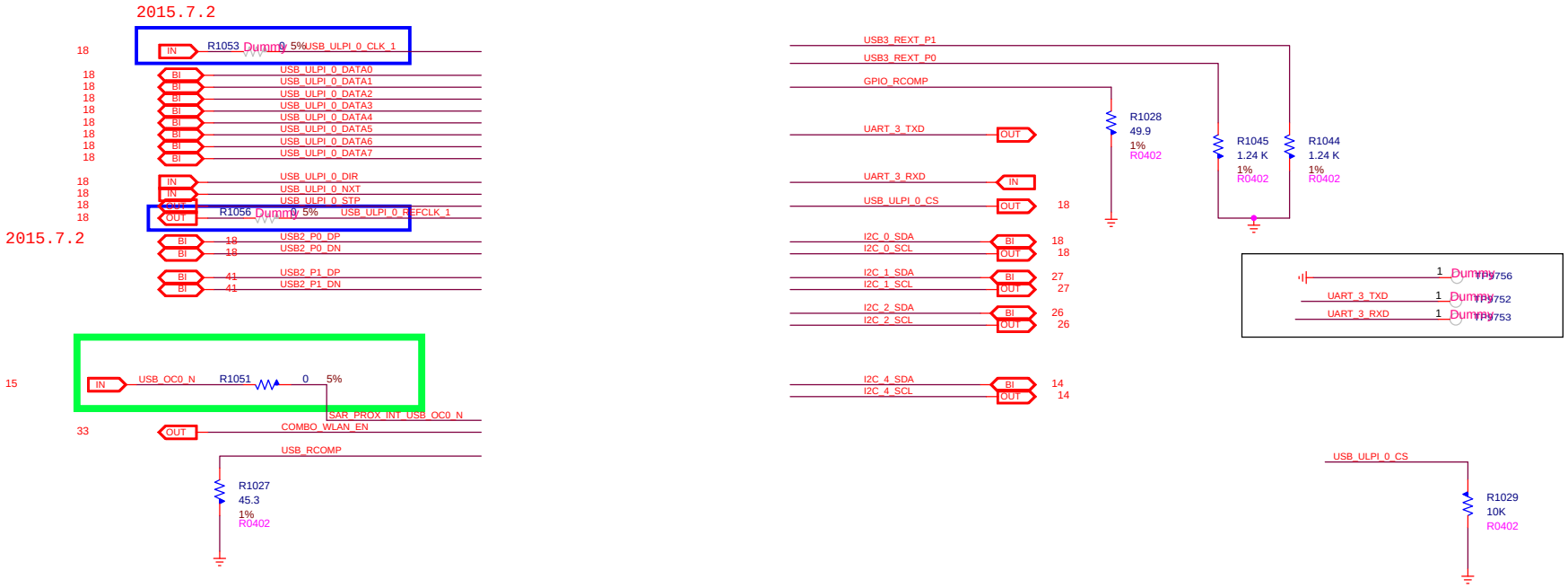

Title	06_SOC_ USB & I2C	
Size Custom	Document Number	Rev V1.0
Date: Friday, September 25, 2015	Sheet 6 of 41	

SOC:PMU/DFX/CLOCK/UART/SUS

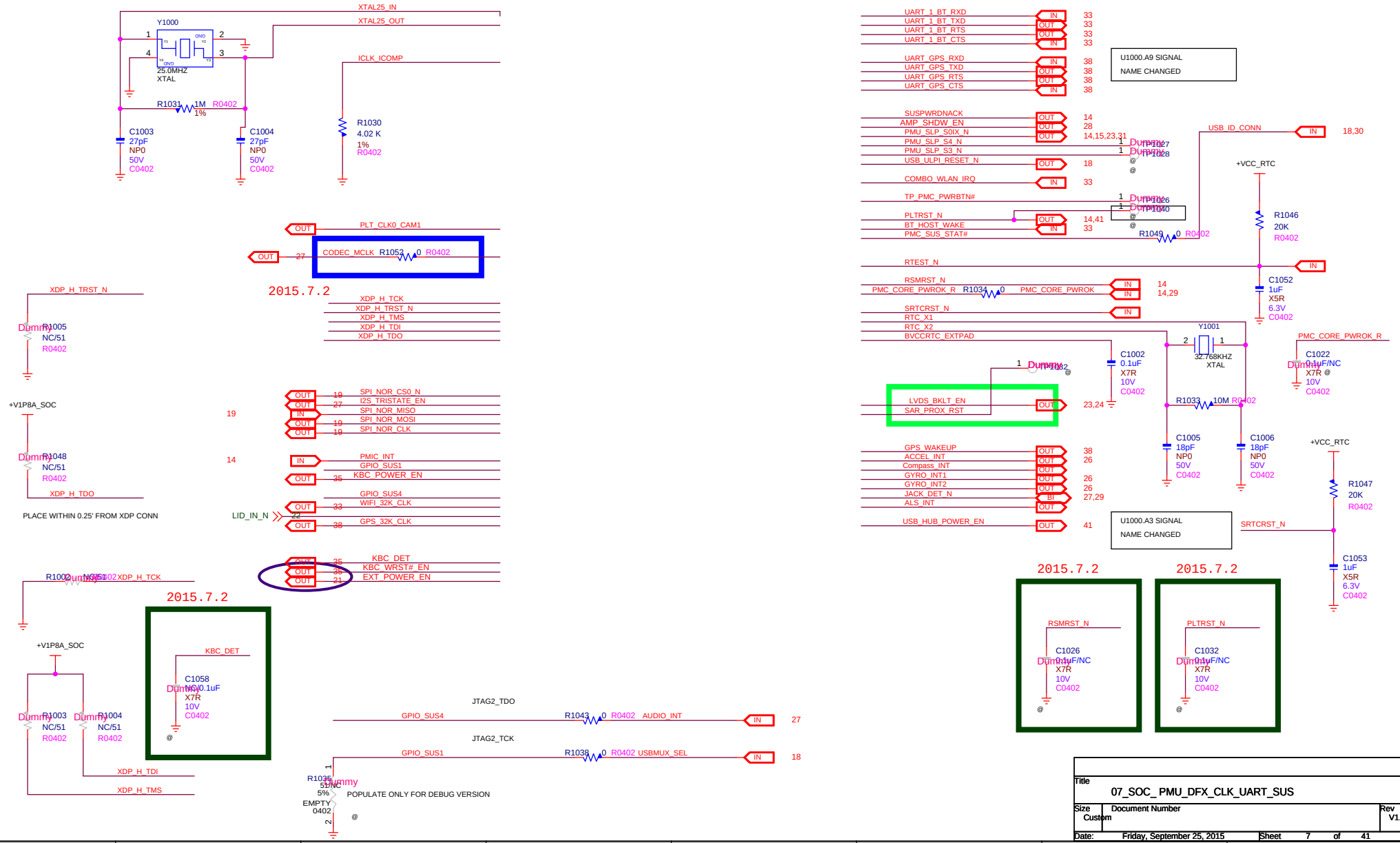

Title	07_SOC_ PMU_DFX_CLK_UART_SUS
Size Custom	Document Number
Rev	V1.0
Date: Friday, September 25, 2015	Sheet 7 of 41

SOC:POWER 1

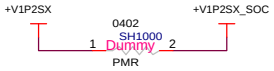

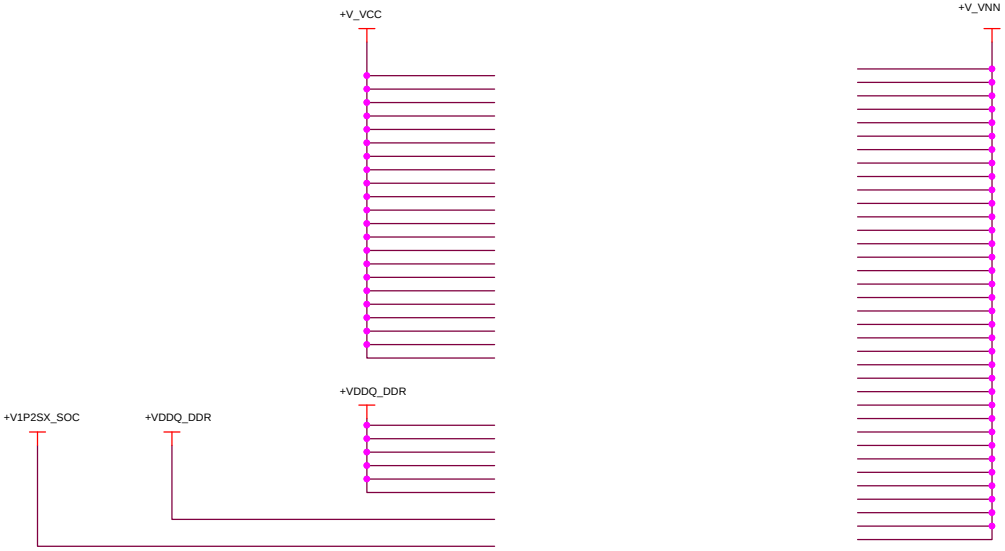

Title	08_SOC_ POWER 1		
Size Custom	Document Number		Rev V1.0
Date: Friday, September 25, 2015	Sheet 8 of 41		

SOC:POWER 2

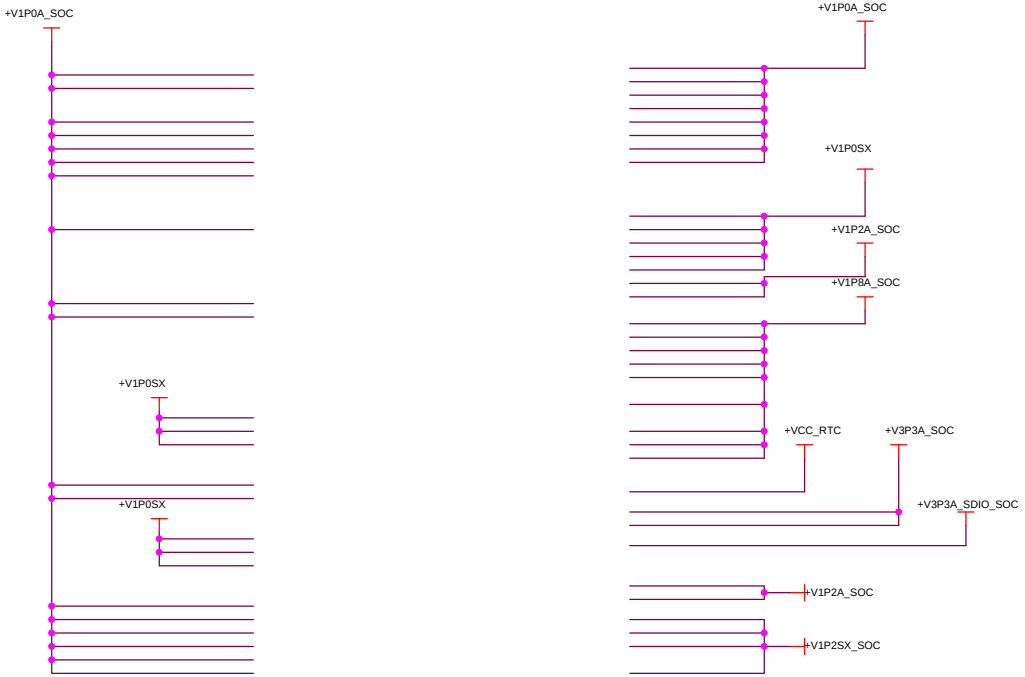

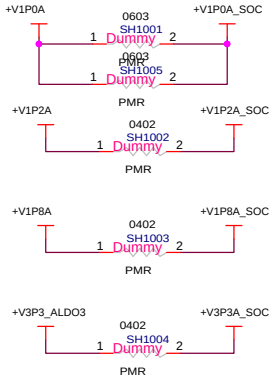

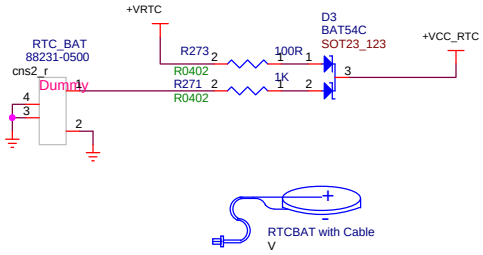

Title	09_SOC_ POWER 2		
Size Custom	Document Number		Rev V1.0
Date: Friday, September 25, 2015	Sheet 9 of 41		

SOC:GND

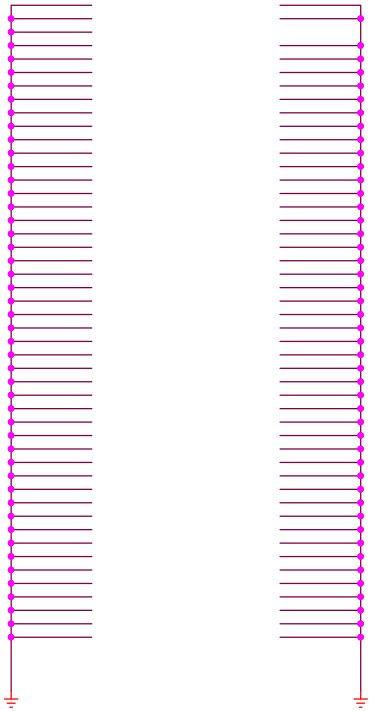

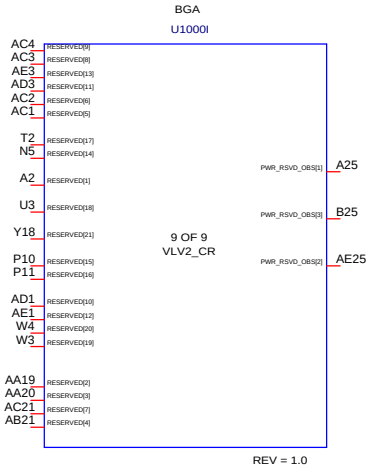

Title	10_SOC_ GND	
Size Custom	Document Number	Rev V1.0
Date: Friday, September 25, 2015	Sheet 10 of 41	

SOC:DECOUPLING

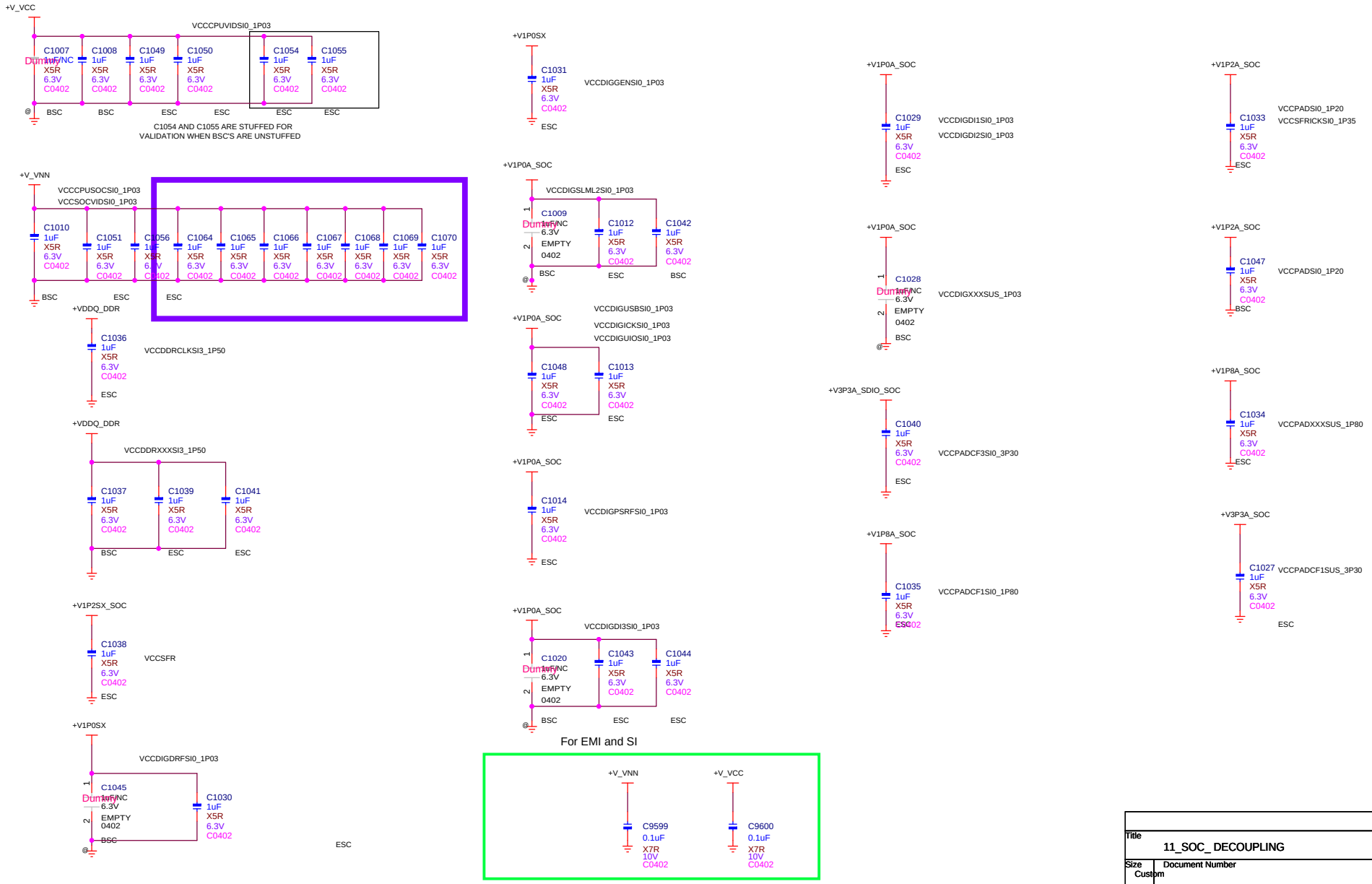

Title	11_SOC_ DECOUPLING	
Size Custom	Document Number	Rev V1.0
Date: Friday, September 25, 2015	Sheet 11 of 41	

PMIC: SWITCHING REGULATORS

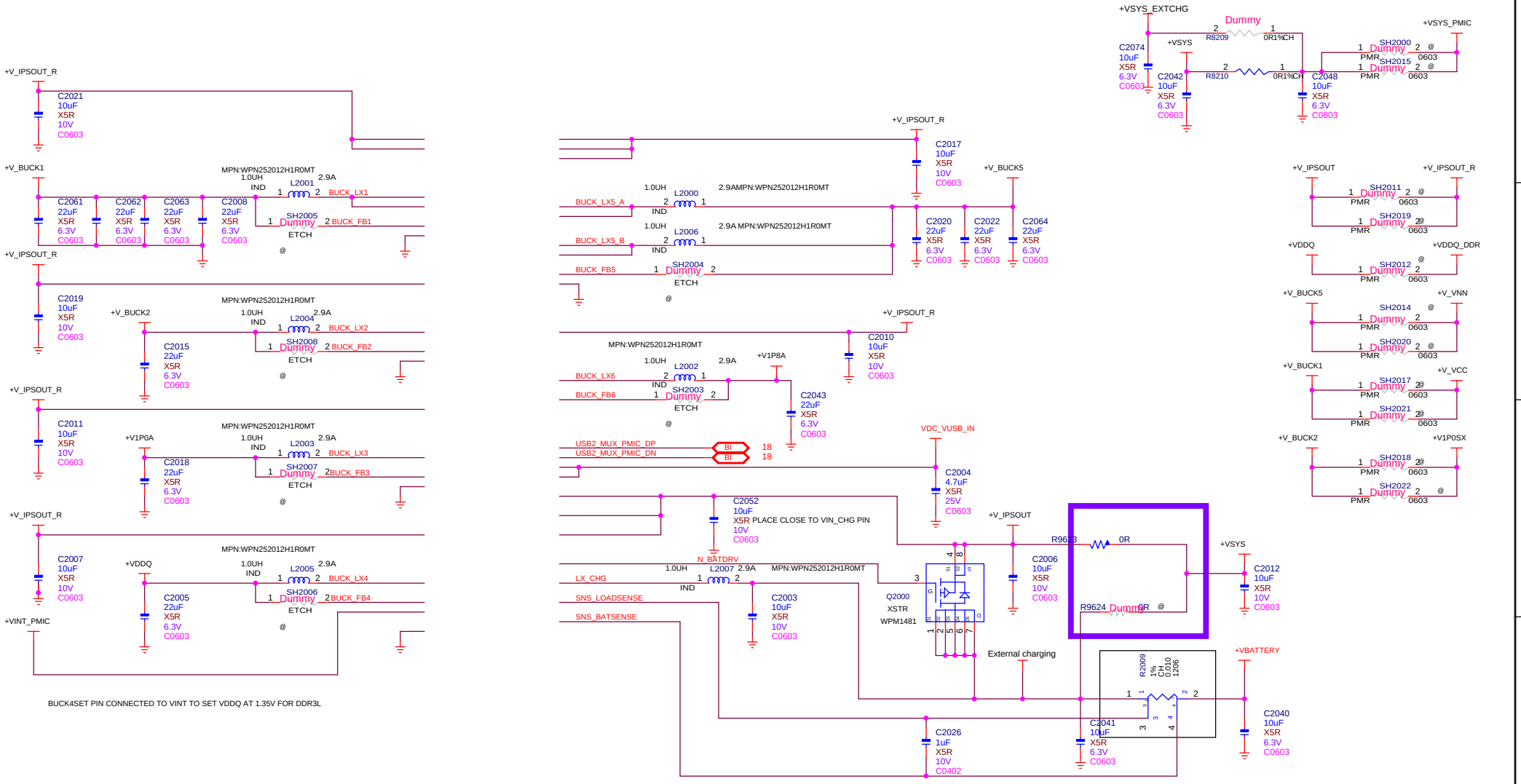

Title	12_PMIC_ SWITCHING REGULATORS
Size: Custom	Document Number
Rev	V1.0
Date: Friday, September 25, 2015	Sheet 12 of 41

PMIC: LDOS

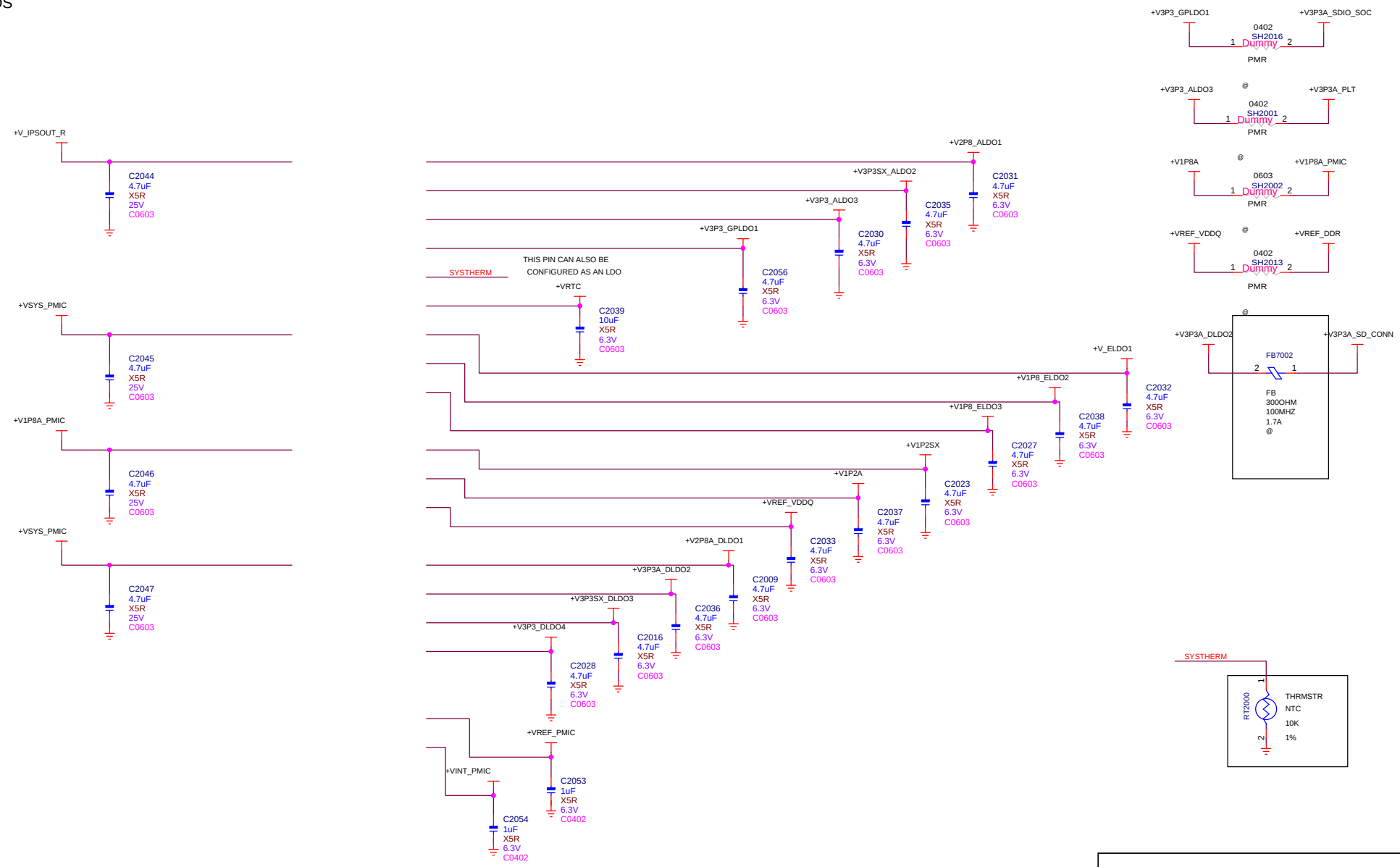

Title	13_PMIC_ LDOS	
Size Custom	Document Number	Rev V1.0
Date: Friday, September 25, 2015	Sheet 13 of 41	

PMIC: HOST & MISC INTERFACES

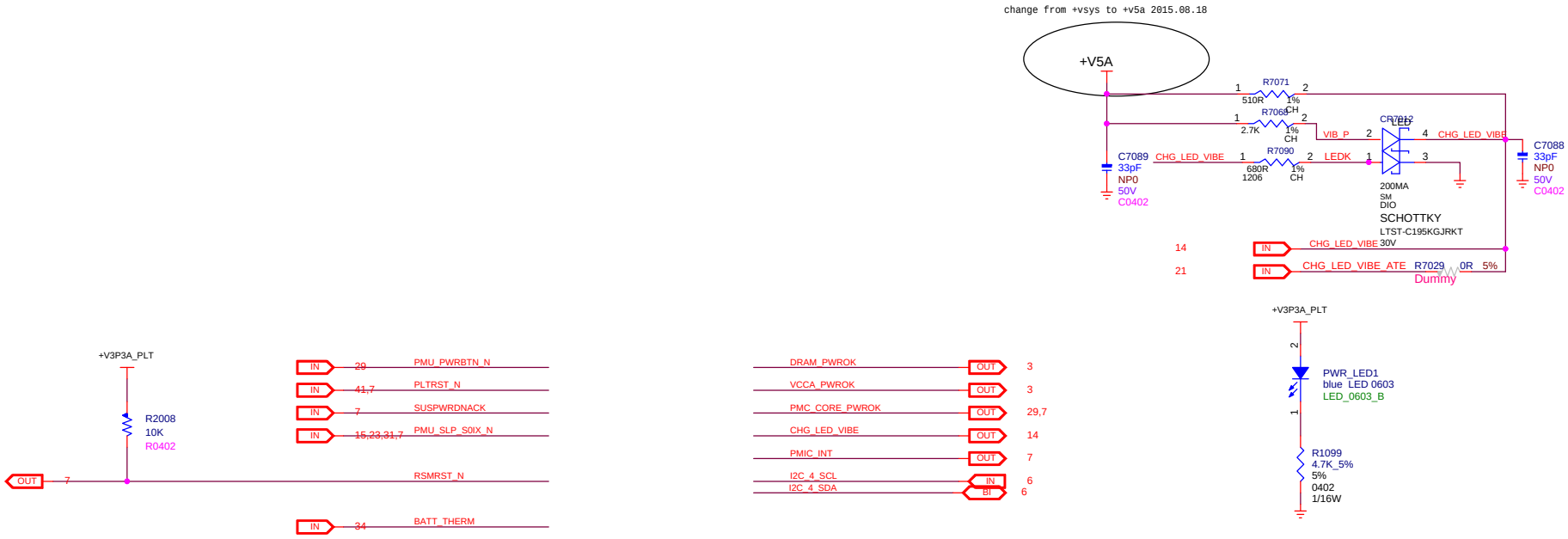

Title	14_PMIC_ HOST & MISC INTERFACES	
Size Custom	Document Number	Rev V1.0
Date: Friday, September 25, 2015	Sheet 14 of 41	

PMIC: EXTERNAL REGULATORS

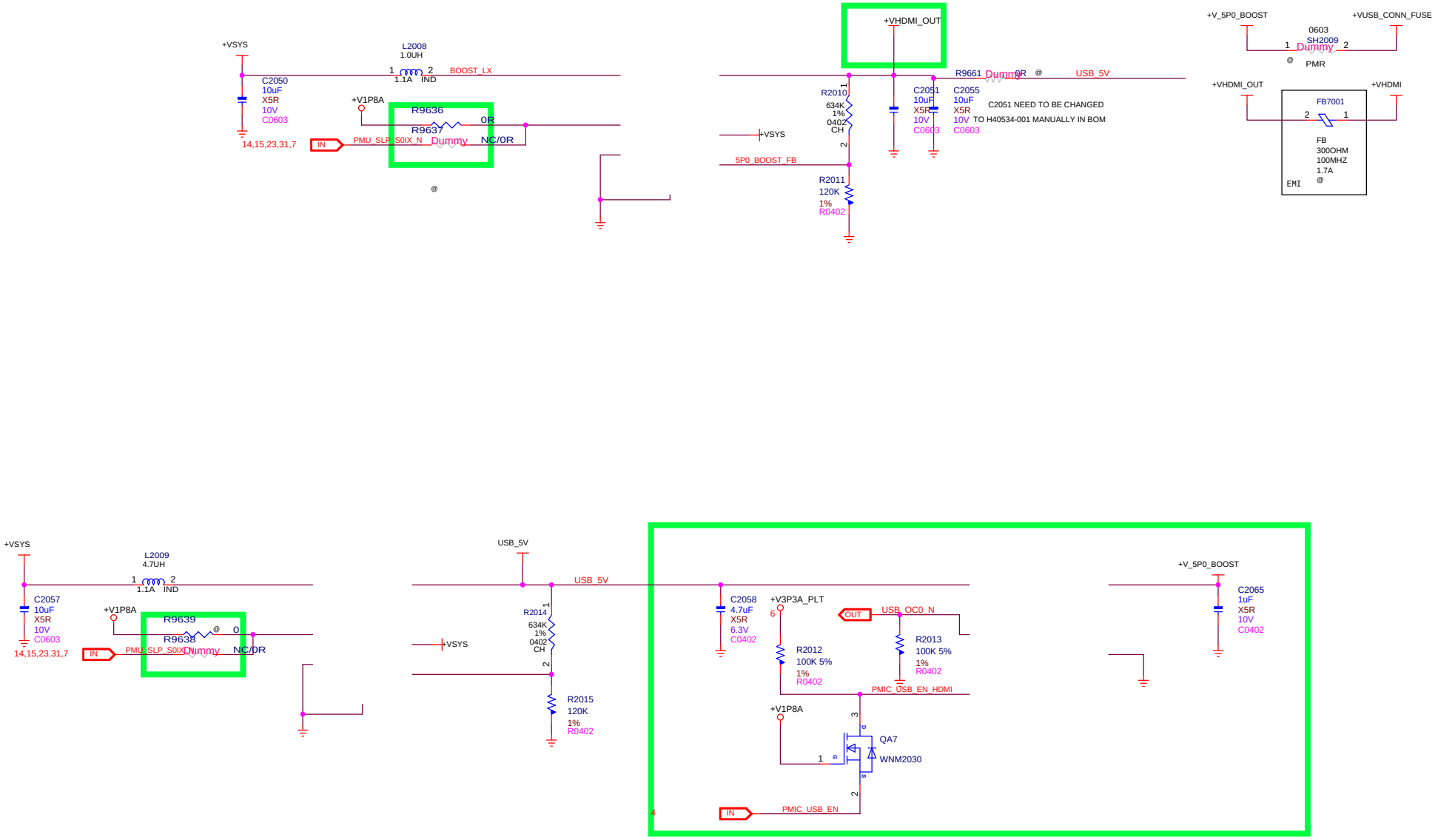

Title	15_PMIC_ EXTERNAL REGULATORS	
Size Custom	Document Number	Rev V1.0
Date: Friday, September 25, 2015	Sheet 15 of 41	

MEMORY DEVICE 0 & 1

PART USED IN BOM - HYNIX #H5TC4G63AFR-PBA(IPN IS G96268-001)

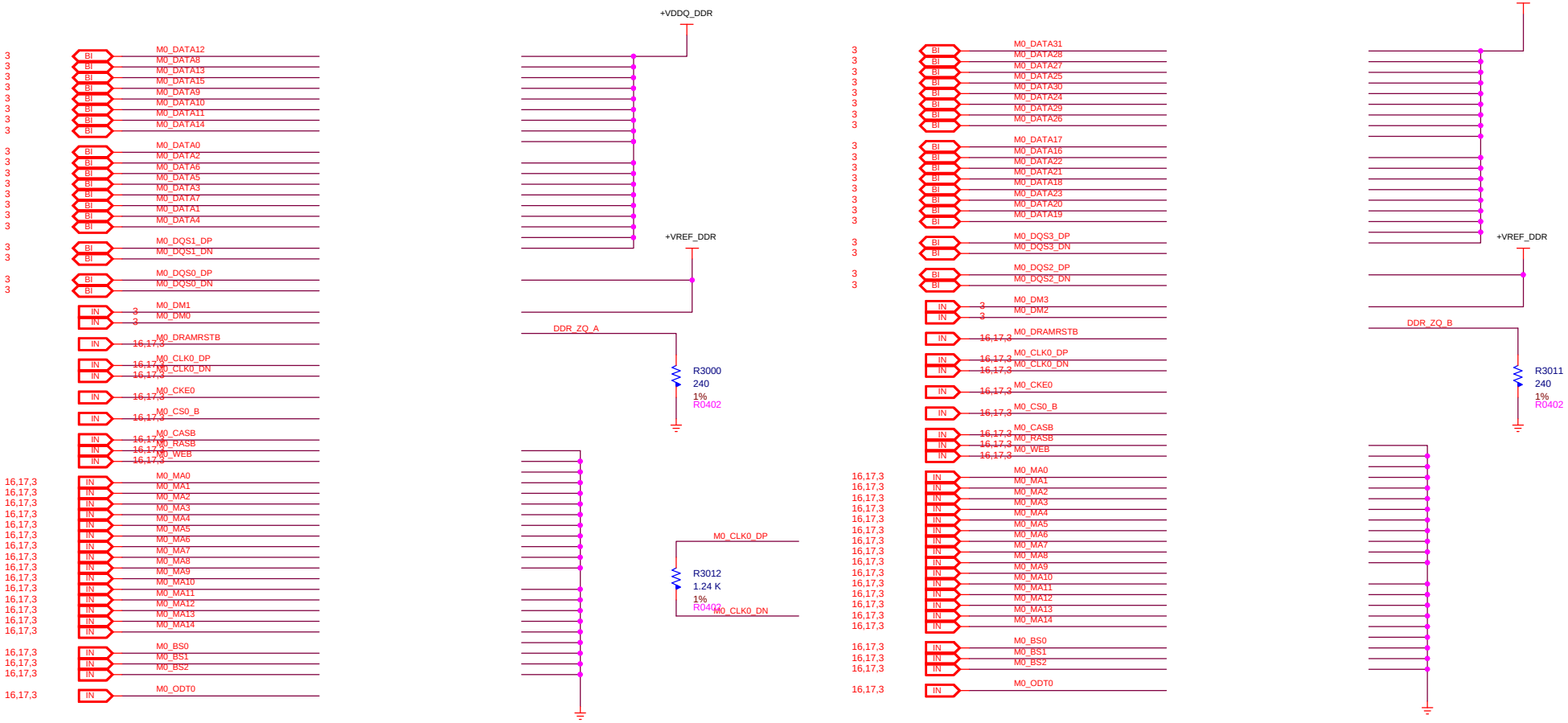

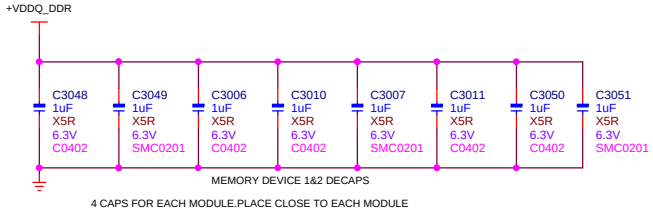

MEMORY DEVICE 1&2 DECAPS

4 CAPS FOR EACH MODULE.PLACE CLOSE TO EACH MODULE

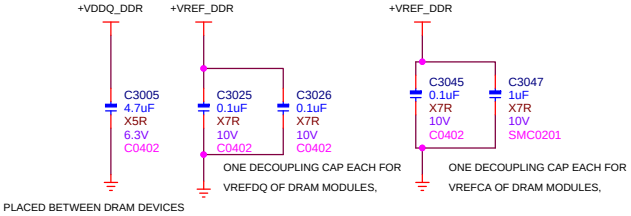

PLACED BETWEEN DRAM DEVICES

ONE DECOUPLING CAP EACH FOR VREFDQ OF DRAM MODULES,

ONE DECOUPLING CAP EACH FOR VREFCA OF DRAM MODULES,

Title	16_MEMORY DEVICE 0 & 1	
Size Custom	Document Number	Rev V1.0
Date: Friday, September 25, 2015	Sheet 16 of 41	

PART USED IN BOM - HYNIX #H5TC4G63AFR-PBA(IPN IS G96268-001)

MEMORY DEVICE 2 & 3

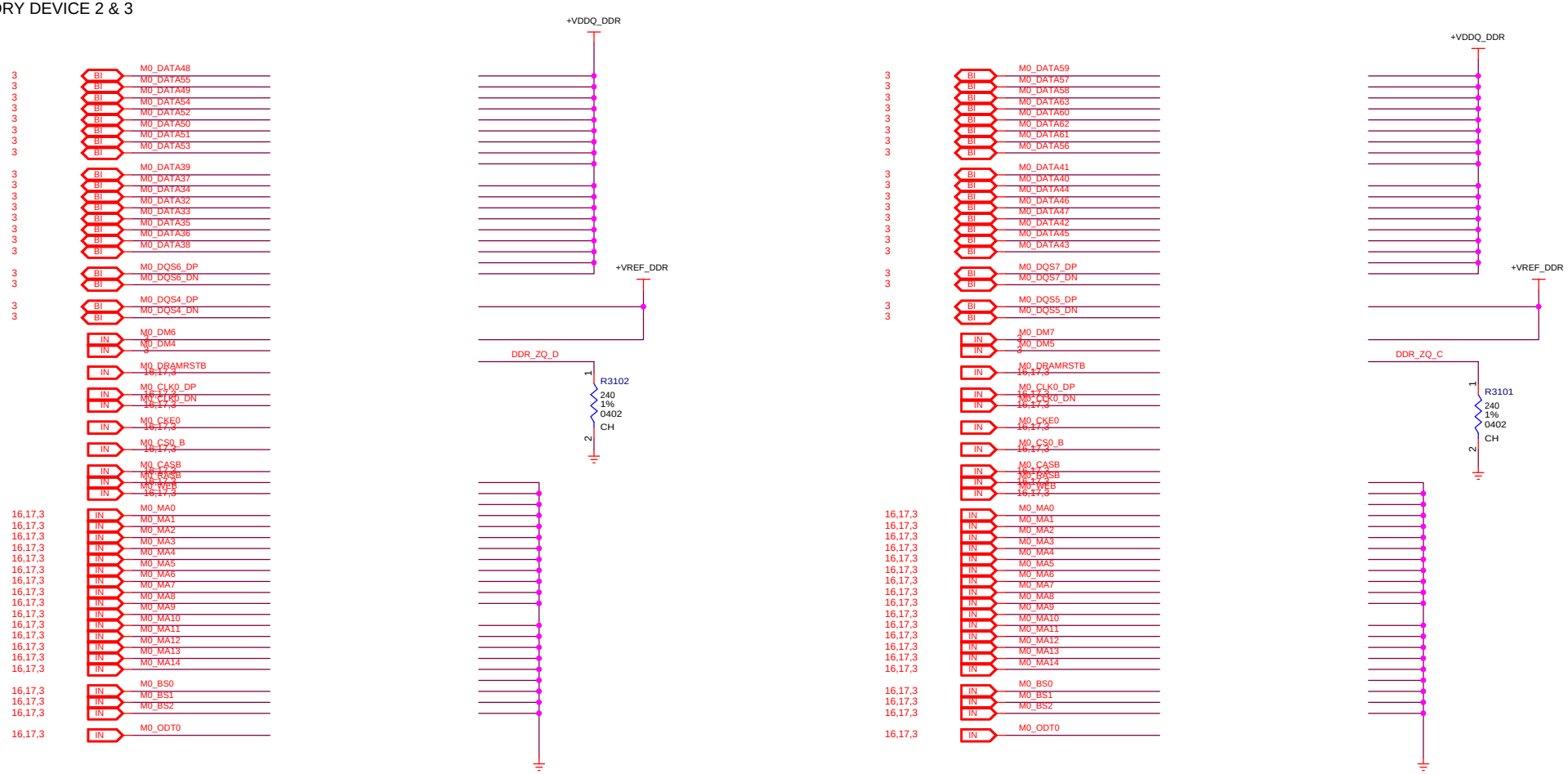

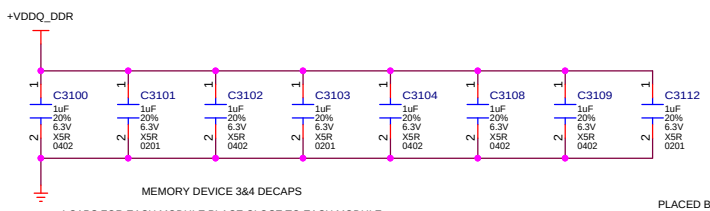

MEMORY DEVICE 3&4 DECAPS

4 CAPS FOR EACH MODULE.PLACE CLOSE TO EACH MODULE

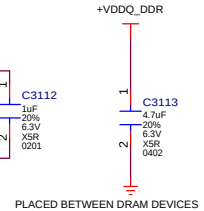

PLACED BETWEEN DRAM DEVICES

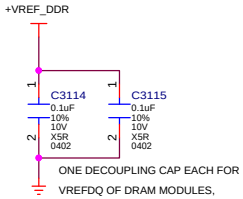

ONE DECOUPLING CAP EACH FOR

VREFDQ OF DRAM MODULES,

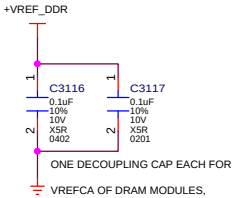

ONE DECOUPLING CAP EACH FOR

VREFCA OF DRAM MODULES,

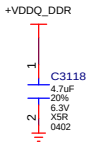

PLACE C3118 BETWEEN MEMORY
U3006 & U3101 (1-2 & 2-3)

Title	17_BLANK PAGE	
Size Custom	Document Number	Rev V1.0
Date: Friday, September 25, 2015	Sheet 17 of 41	

USB PHY & MUX

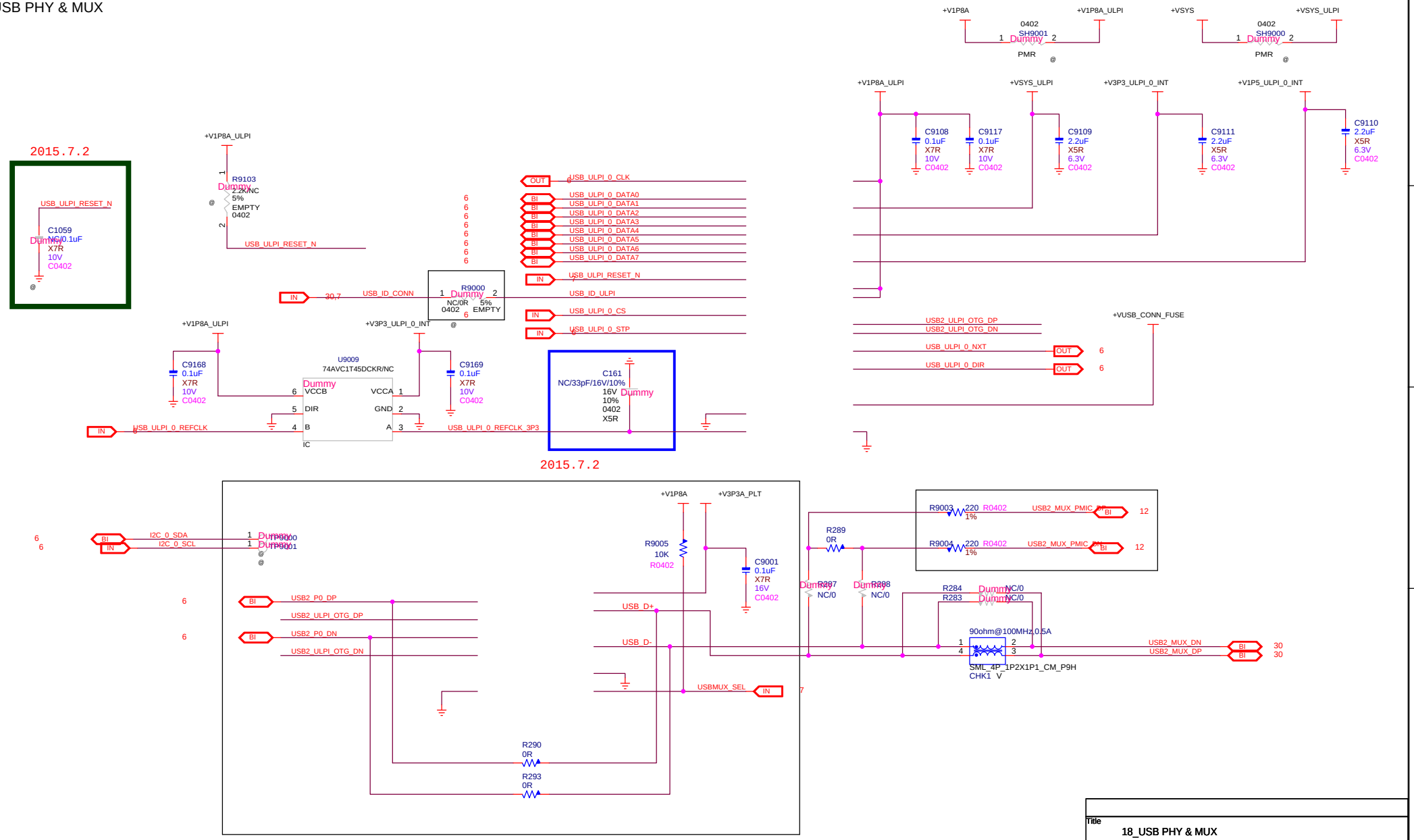

Title	18_USB PHY & MUX
Size	Custom
Document Number	
Rev	V1.0
Date:	Friday, September 25, 2015
Sheet	18 of 41

SPI NOR FLASH

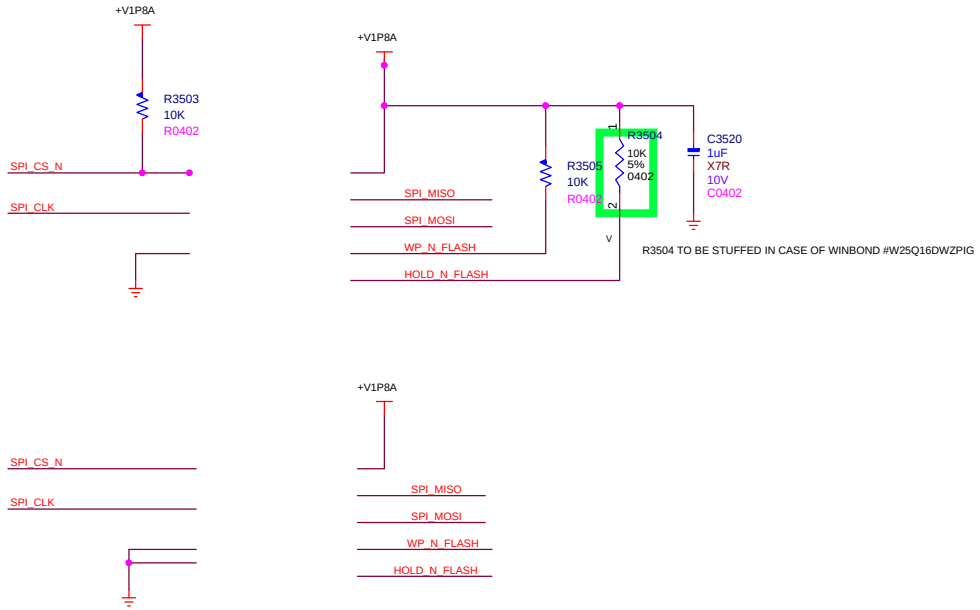

DEDIPROG MUST HAVE THE VOLTAGE SETTING FIXED AT 1.8V

Title	19_SPI NOR FLASH	
Size Custom	Document Number	Rev V1.0
Date: Friday, September 25, 2015	Sheet 19 of 41	

EMMC

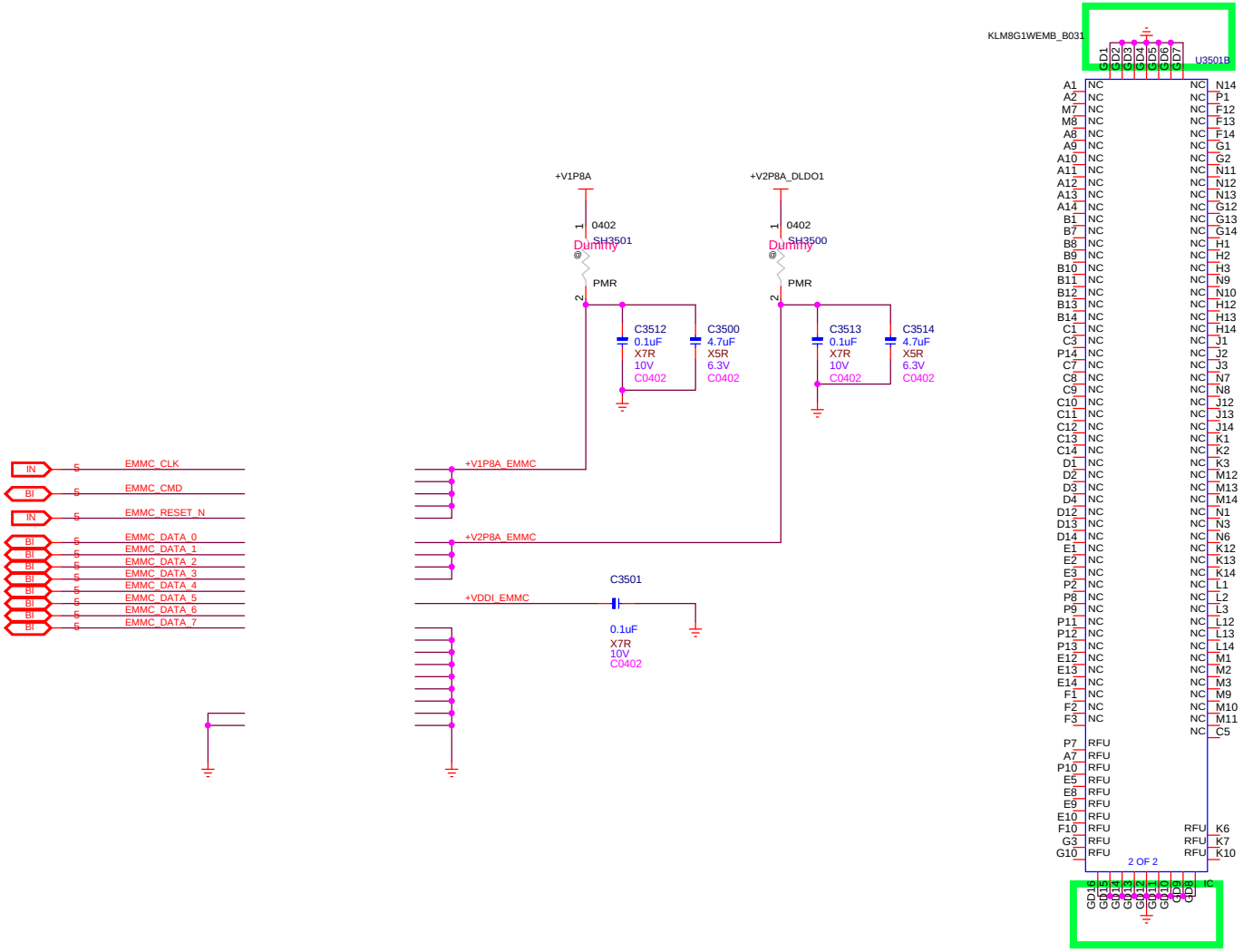

Title	20_EMMC
Size: Custom	Document Number
Rev	V1.0
Date: Friday, September 25, 2015	Sheet 20 of 41

DC-POWER

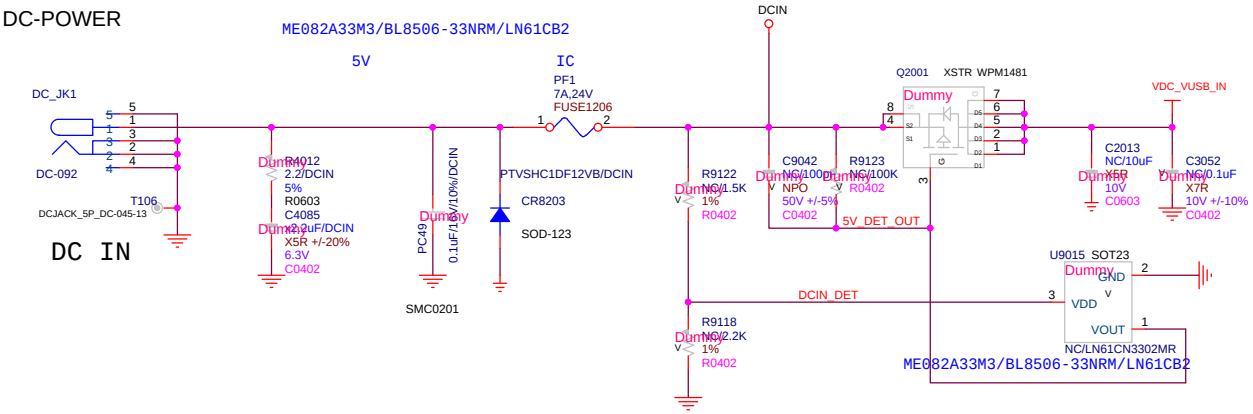

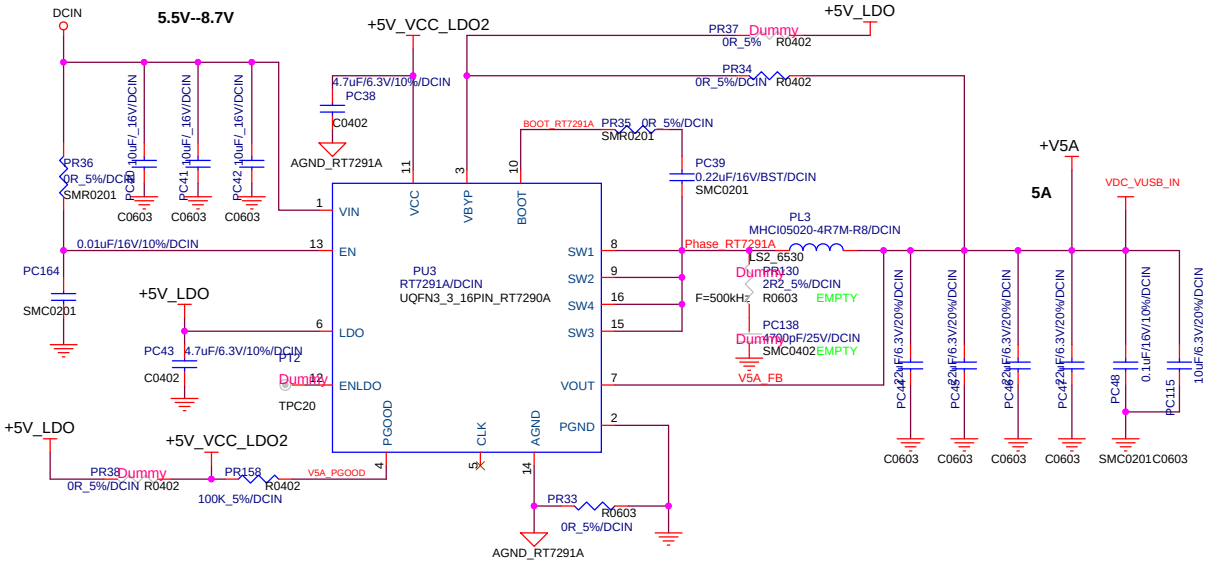

EXTERNAL CHARGER

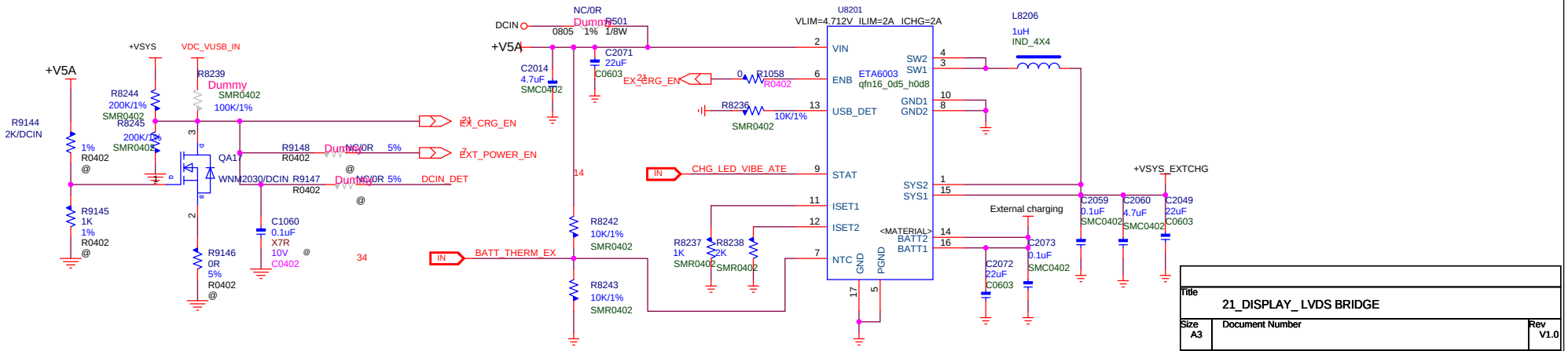

Title	21_DISPLAY_ LVDS BRIDGE	
Size A3	Document Number	Rev V1.0
Date: Monday, August 24, 2015	Sheet 21 of 41	

DISPLAY: BIAS VOLTAGE REGULATORS

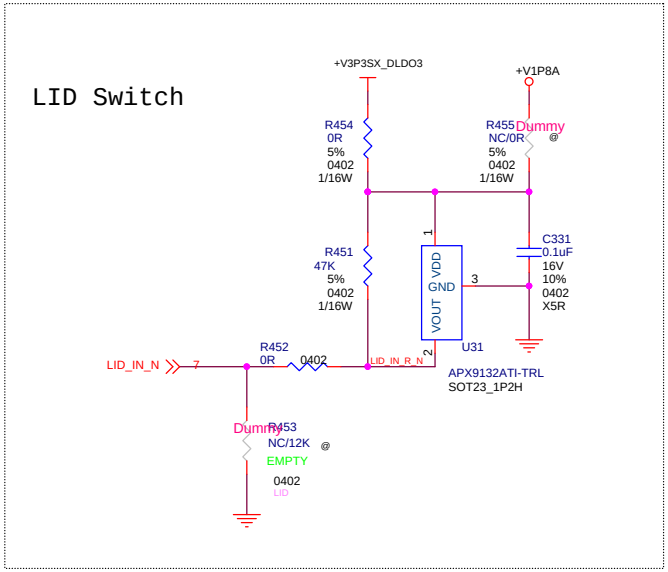

Title	22_DISPLAY_ BIAS VOLTAGE REGULA	
Size Custom	Document Number	Rev V1.0
Date: Monday, August 24, 2015	Sheet 22 of 41	

DISPLAY: BACKLIGHT CONTROLLER

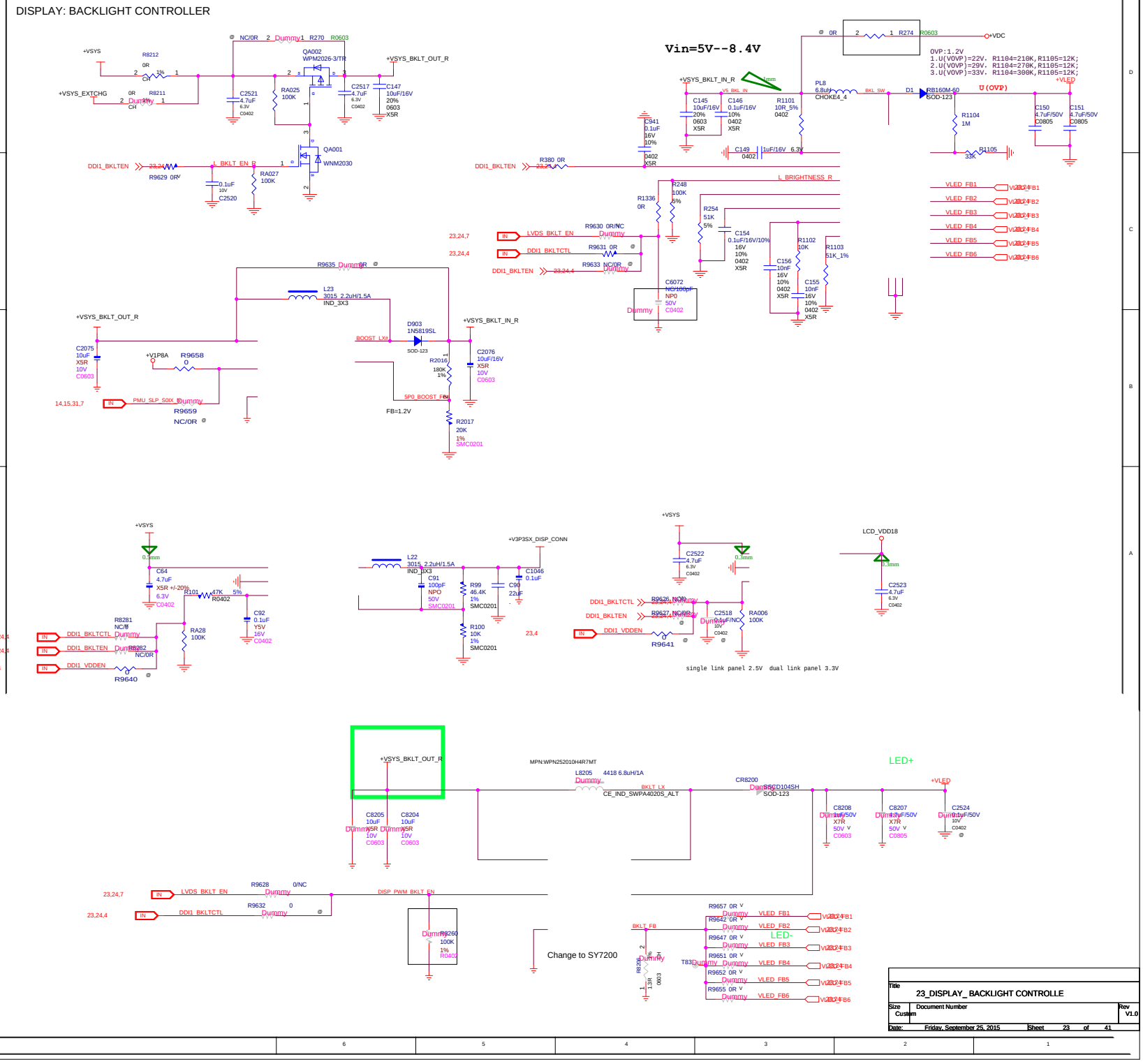

Title	23_DISPLAY_ BACKLIGHT CONTROLLE	
Size: Custom	Document Number	Rev: V1.0
Date: Friday, September 25, 2015	Sheet 23 of 41	

DISPLAY & TOUCH CONNECTORS

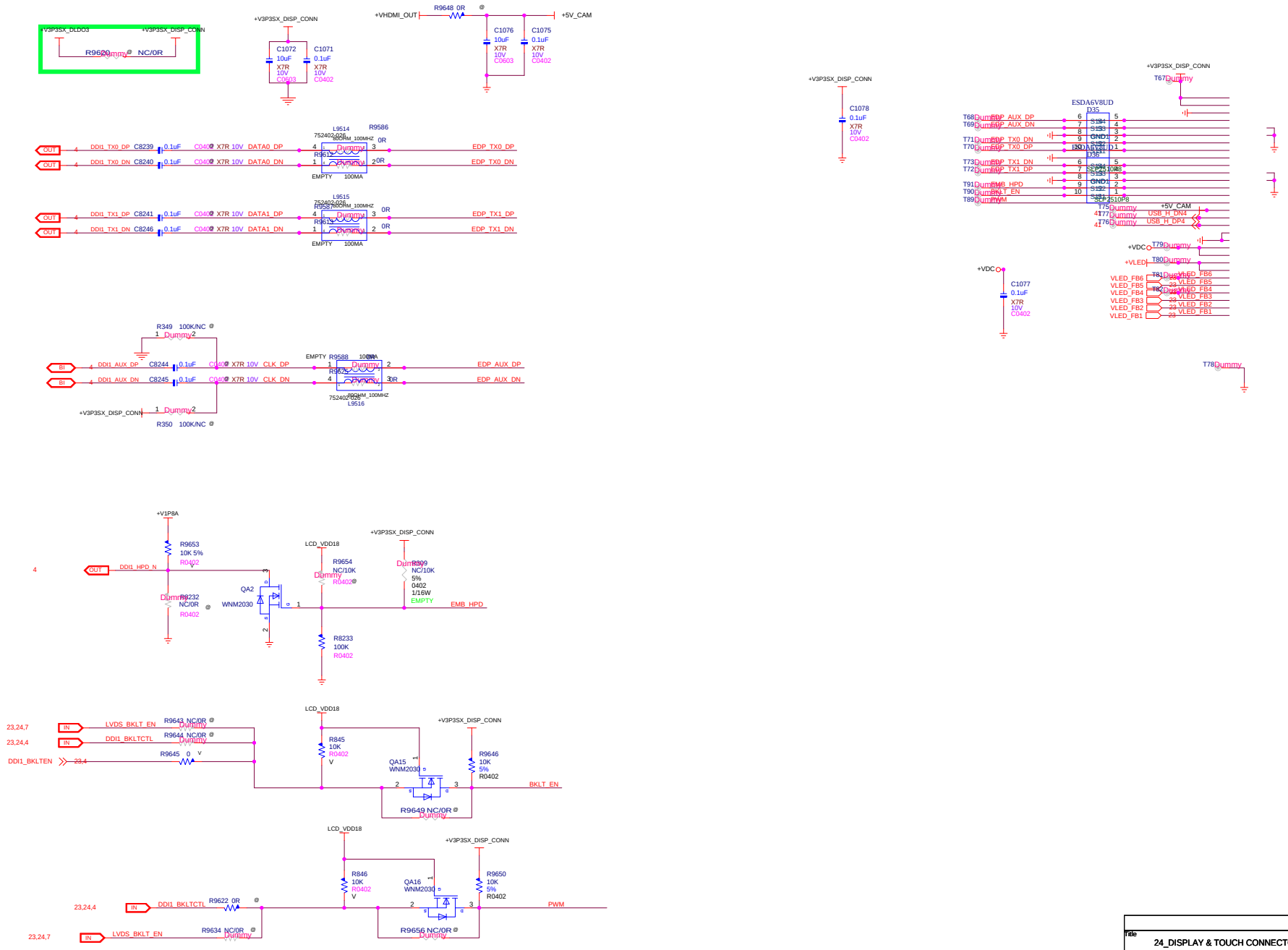

Title	24_DISPLAY & TOUCH CONNECTORS
Size C	Document Number
Rev	V1.0
Date:	Friday, September 25, 2015
Sheet	24 of 41

SENSORS

ACCELEROMETER

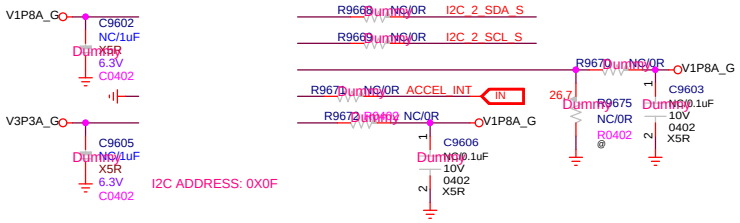

Accel Compass

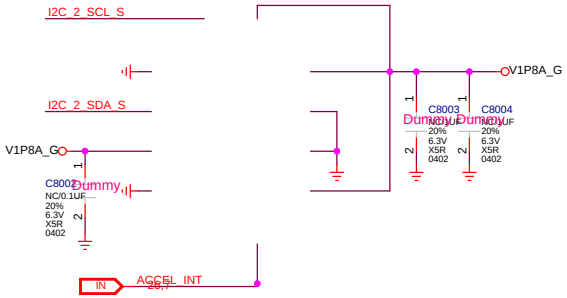

GYRO

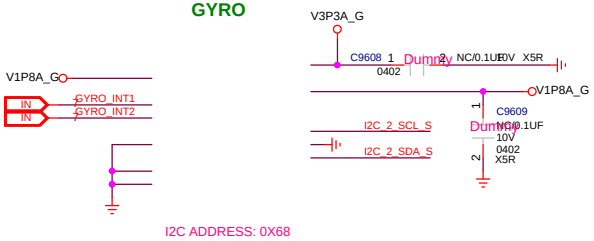

Title	26_SENSORS	
Size: Custom	Document Number	Rev V1.0
Date: Friday, September 25, 2015	Sheet 26 of 40	

LED+

AUDIO CODEC

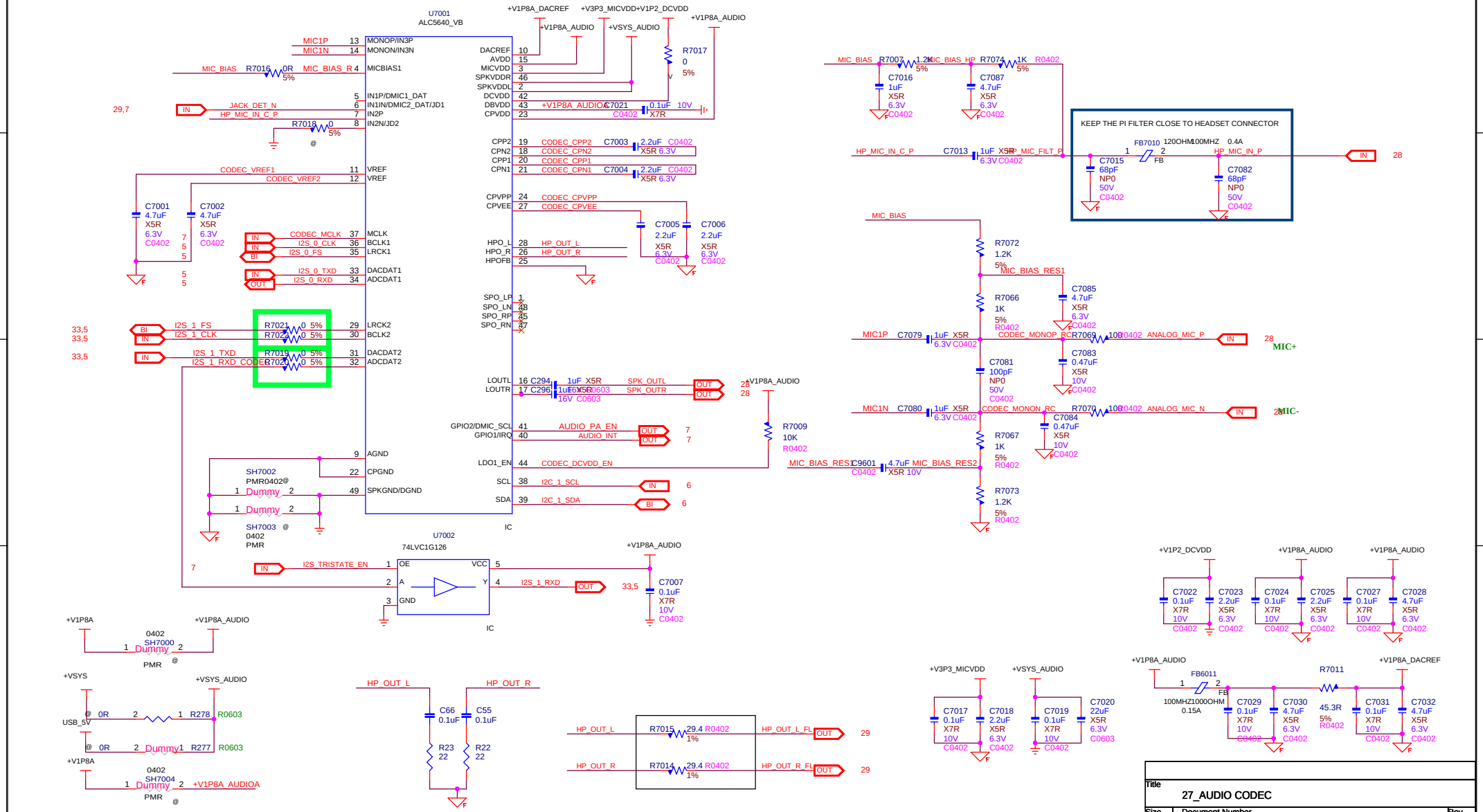

Title
27_AUDIO CODEC

Size	Document Number	Rev
Custom		V1.0

Date: Monday, August 24, 2015 Sheet 27 of 41

SPEAKER

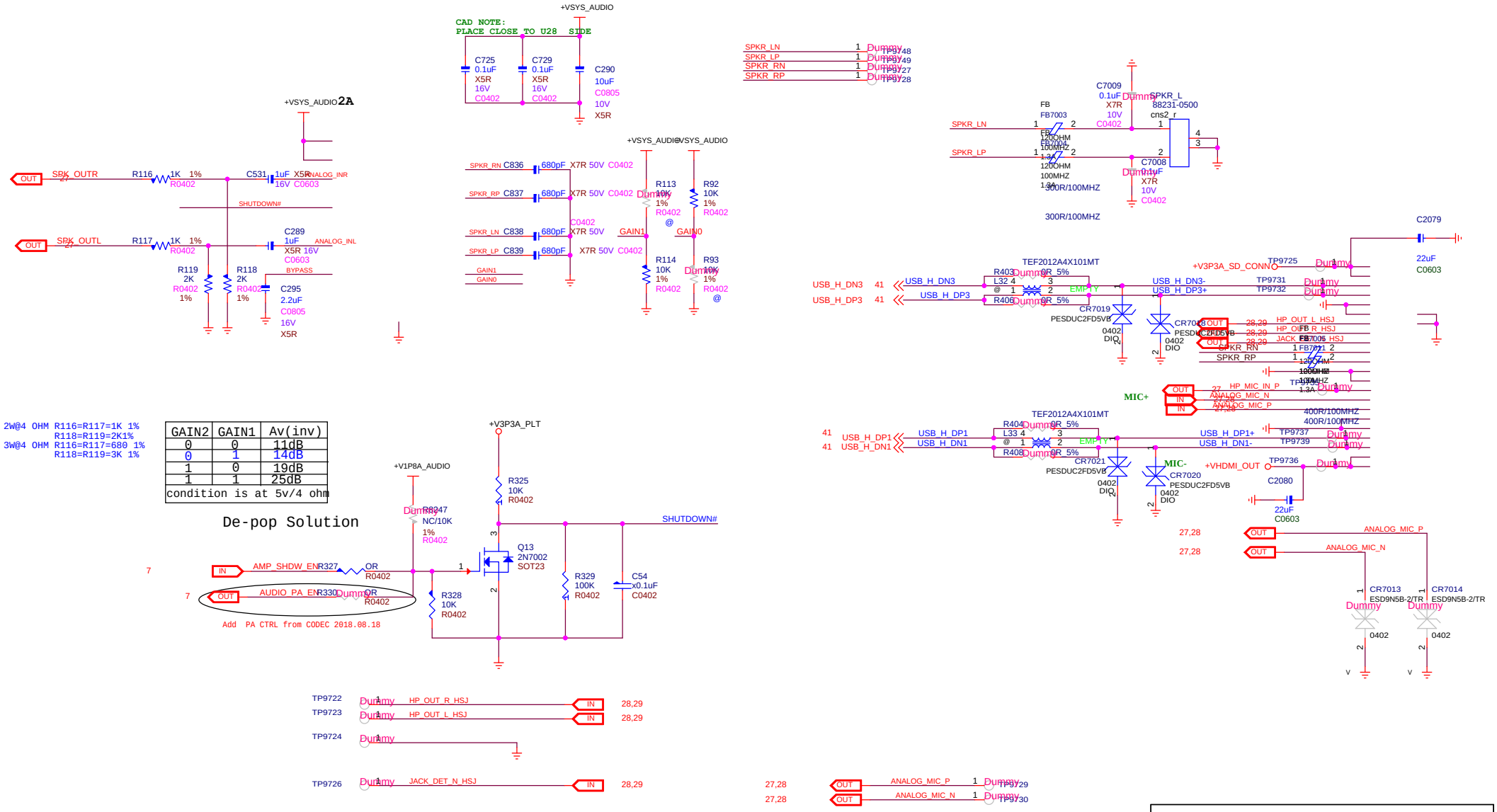

GAIN2	GAIN1	Av(inv)
0	0	11dB
0	1	14dB
1	0	19dB
1	1	25dB
condition is at 5v/4 ohm		

Title	28_SPEAKERS	
Size Custom	Document Number	Rev V1.0
Date: Friday, September 25, 2015	Sheet 28 of 41	

HEADSET JACK AND BUTTONS

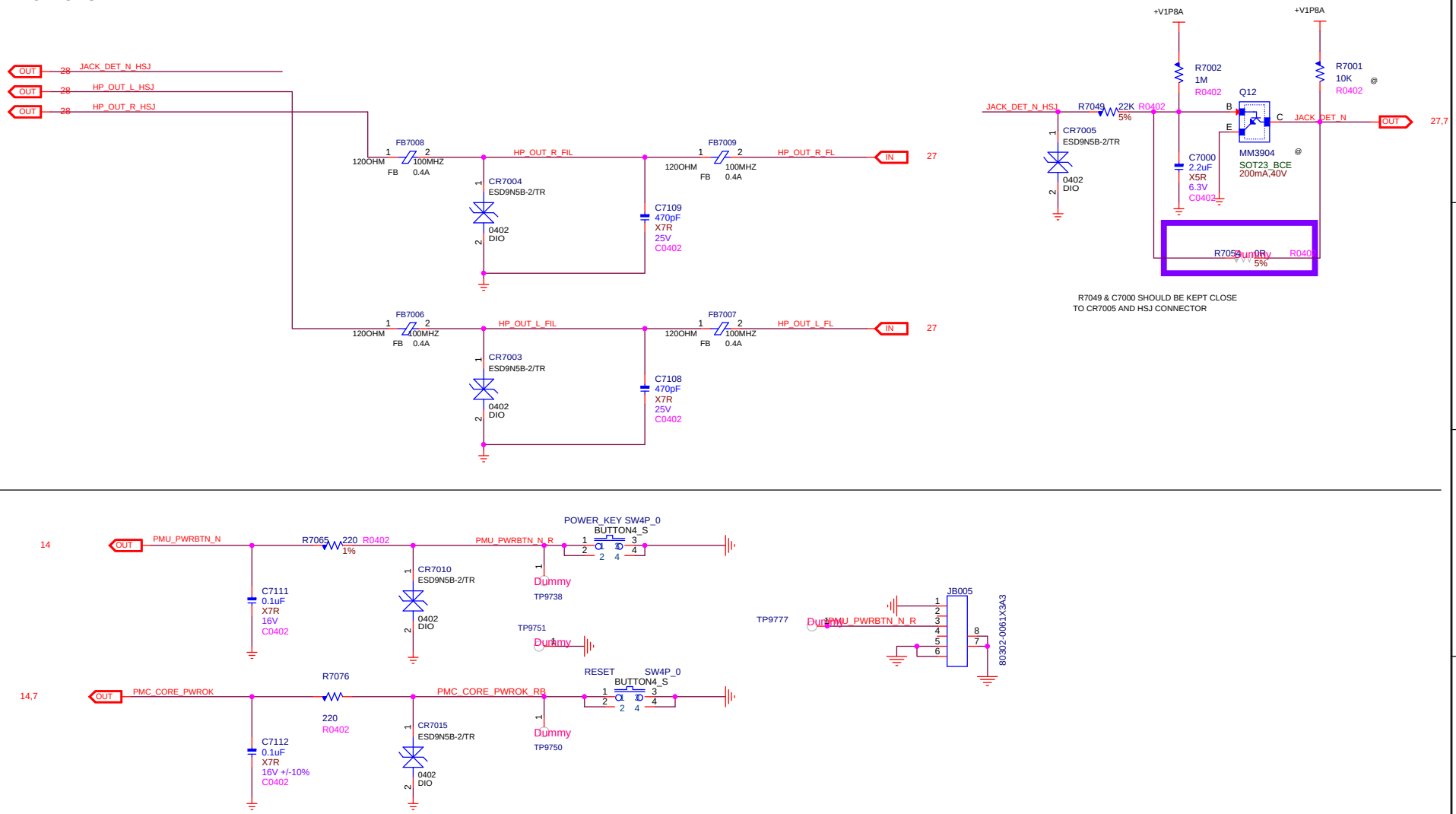

Title	29_HEADSET JACK AND BUTTONS	
Size: Custom	Document Number	Rev: V1.0
Date: Monday, August 24, 2015	Sheet 29 of 41	

USB CONNECTOR

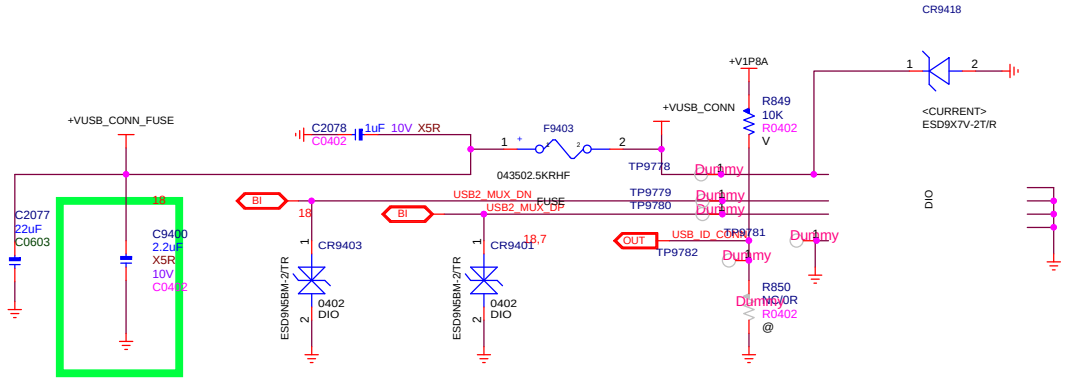

Title	30_USB CONNECTOR
Size: Custom	Document Number
Rev	V1.0
Date: Friday, September 25, 2015	Sheet 30 of 41

HDMI LEVEL SHIFTERS & CONNECTOR

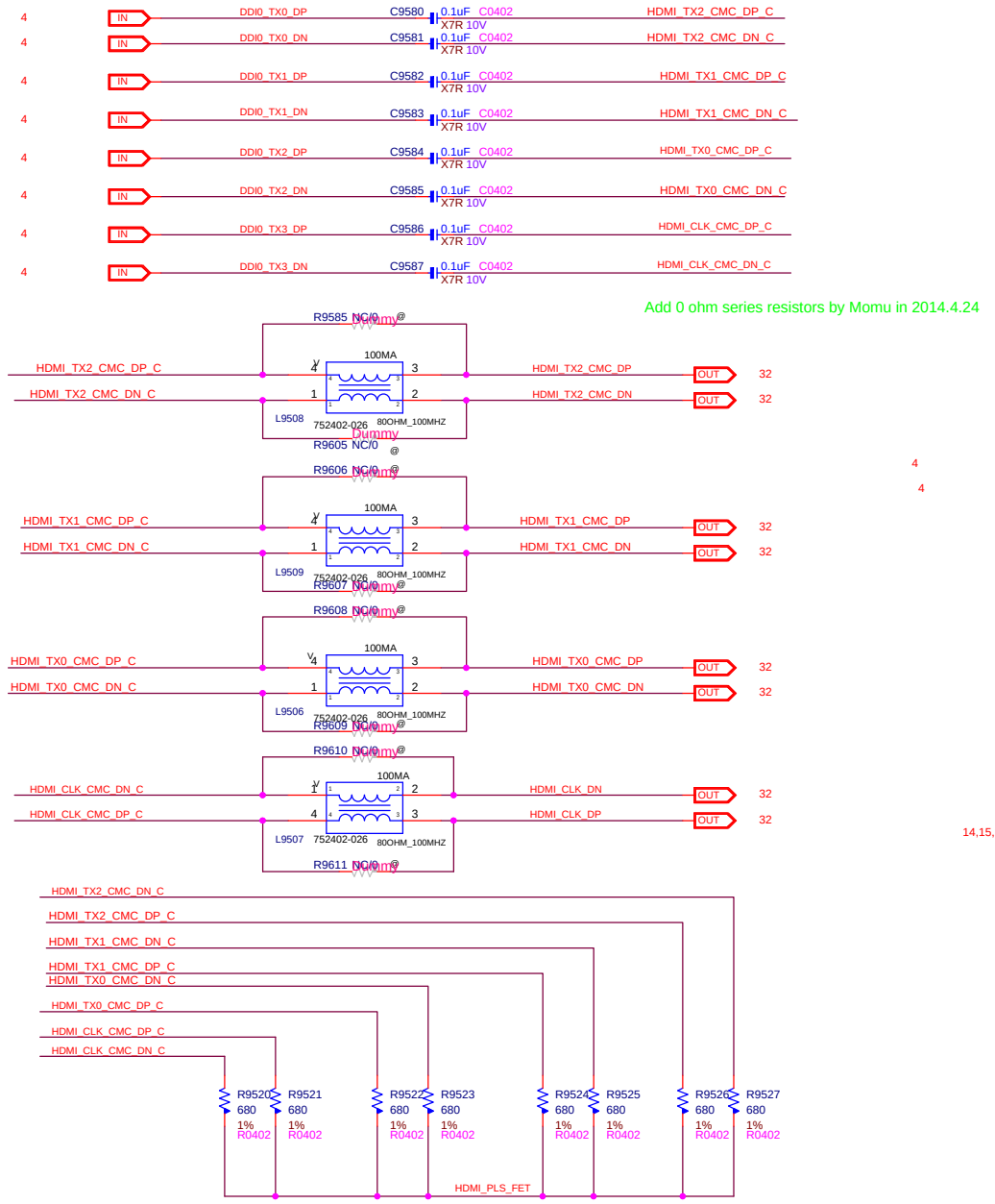

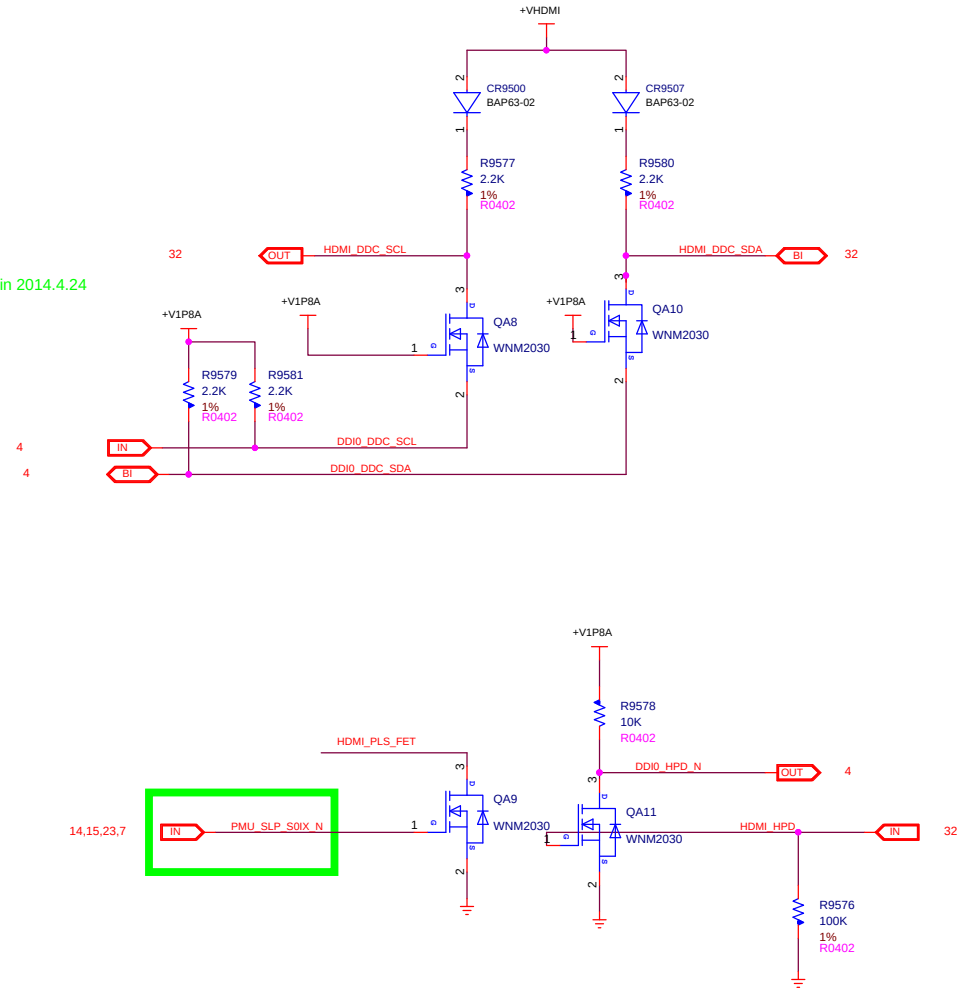

Title	31_HDMI LEVEL SHIFTERS	
Size Custom	Document Number	Rev V1.0
Date: Monday, August 24, 2015	Sheet 31 of 41	

HDMI CONNECTOR

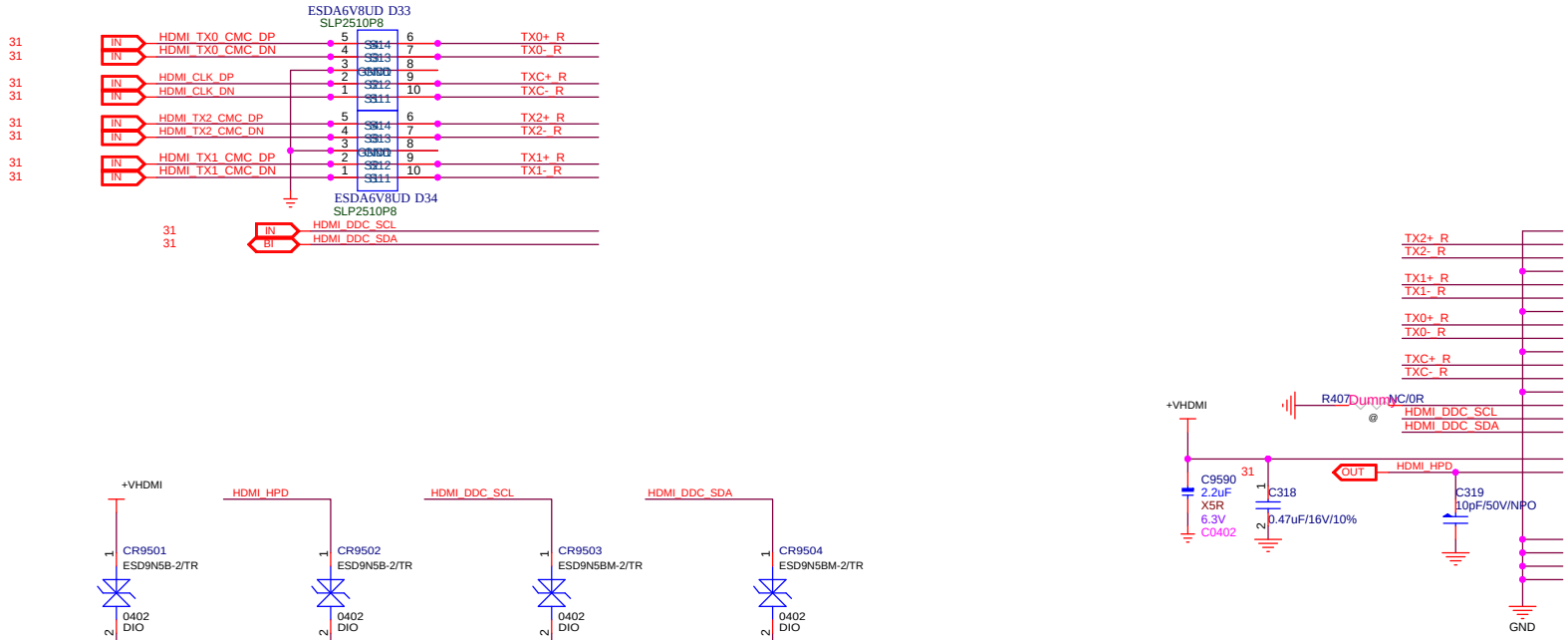

Title	32_HDMI CONNECTOR	
Size Custom	Document Number	Rev V1.0
Date: Friday, September 25, 2015	Sheet 32 of 41	

SOC: MEMORY

IPN:H28446-001

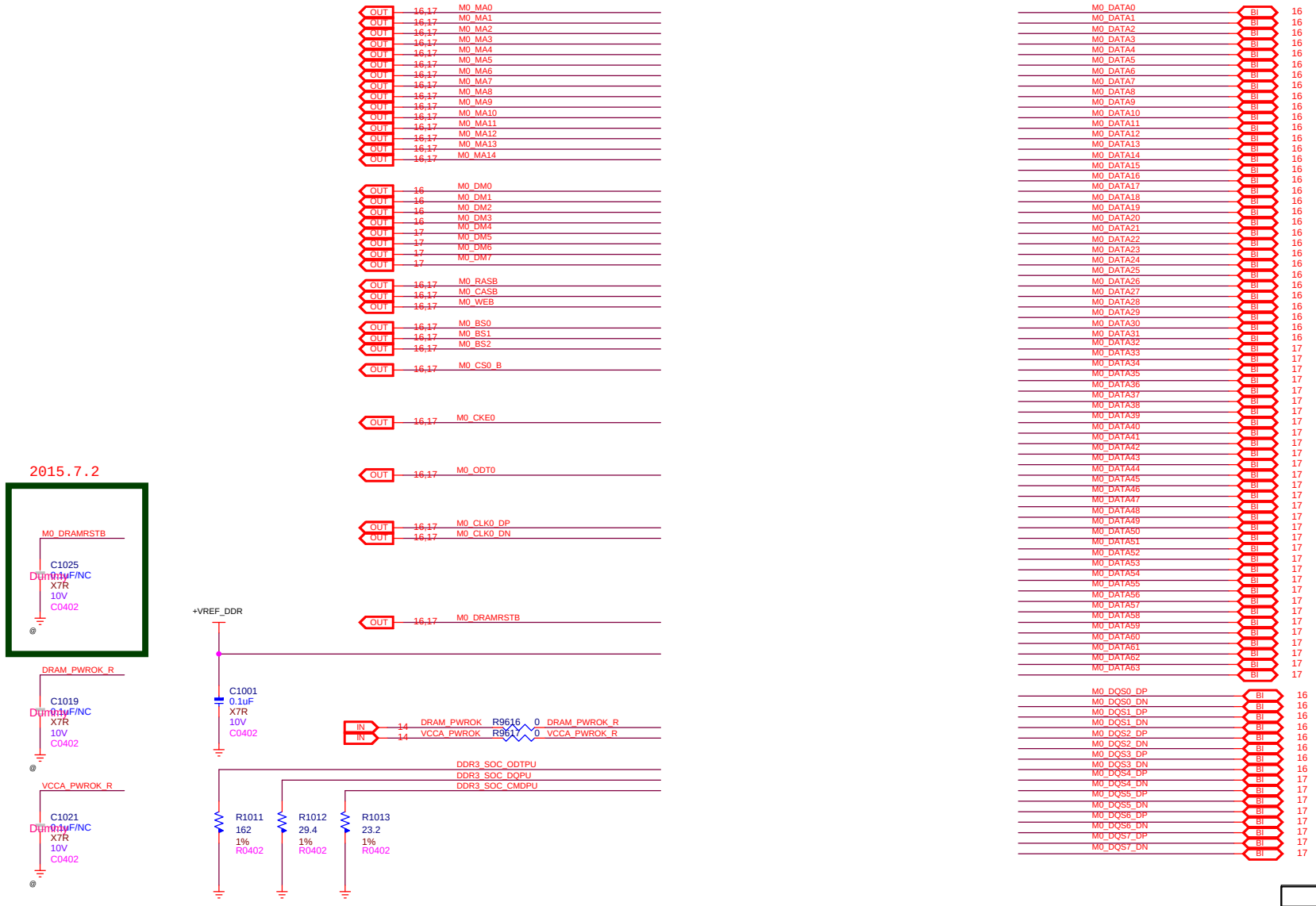

Title	03_SOC_ MEMORY
Size: Custom	Document Number
Rev	V1.0
Date: Friday, September 25, 2015	Sheet 3 of 41

WIFI-BT

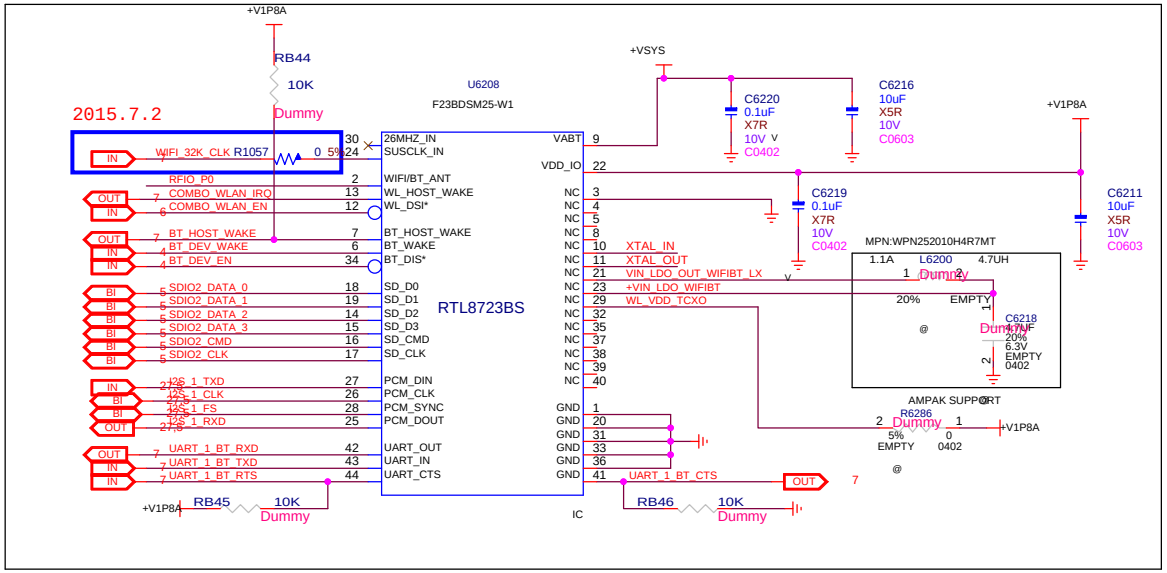

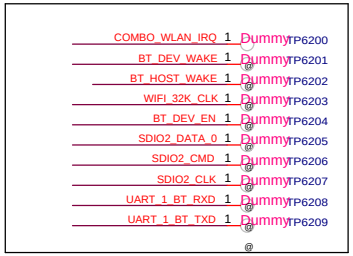

FOR AMPAK, R6289 TO
BE CHANGED TO 10PF

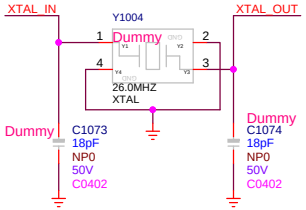

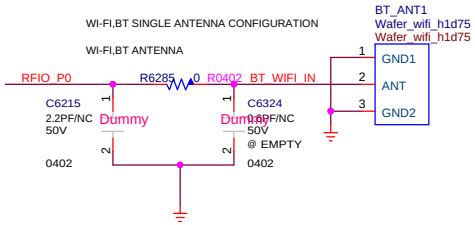

Title	33_WIFI-BT		
Size Custom	Document Number		Rev V1.0
Date: Monday, August 24, 2015		Sheet 33 of 41	

BATTERY & DEBUG CONNECTOR

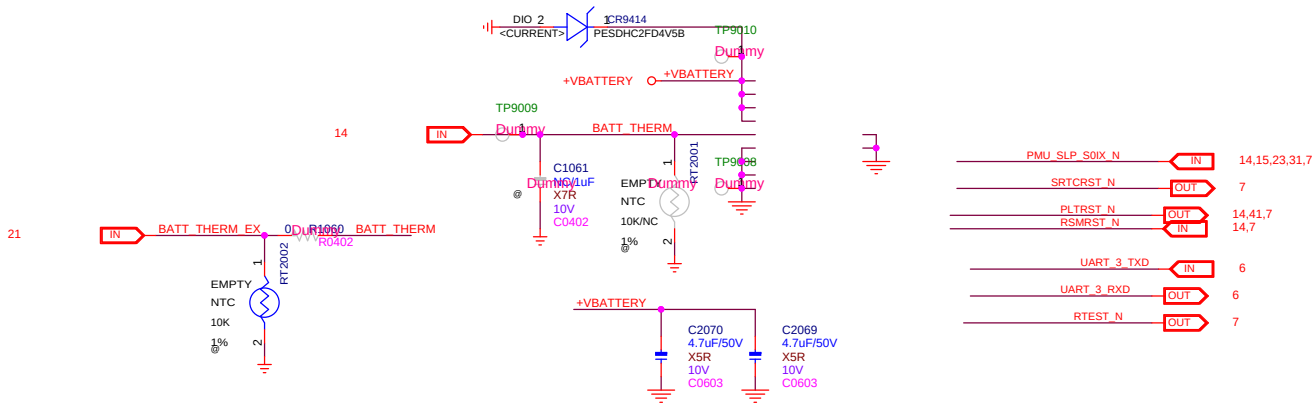

Title	36_BATTERY & DEBUG CONNECTOR	
Size Custom	Document Number	Rev V1.0
Date: Friday, September 25, 2015	Sheet 34 of 41	

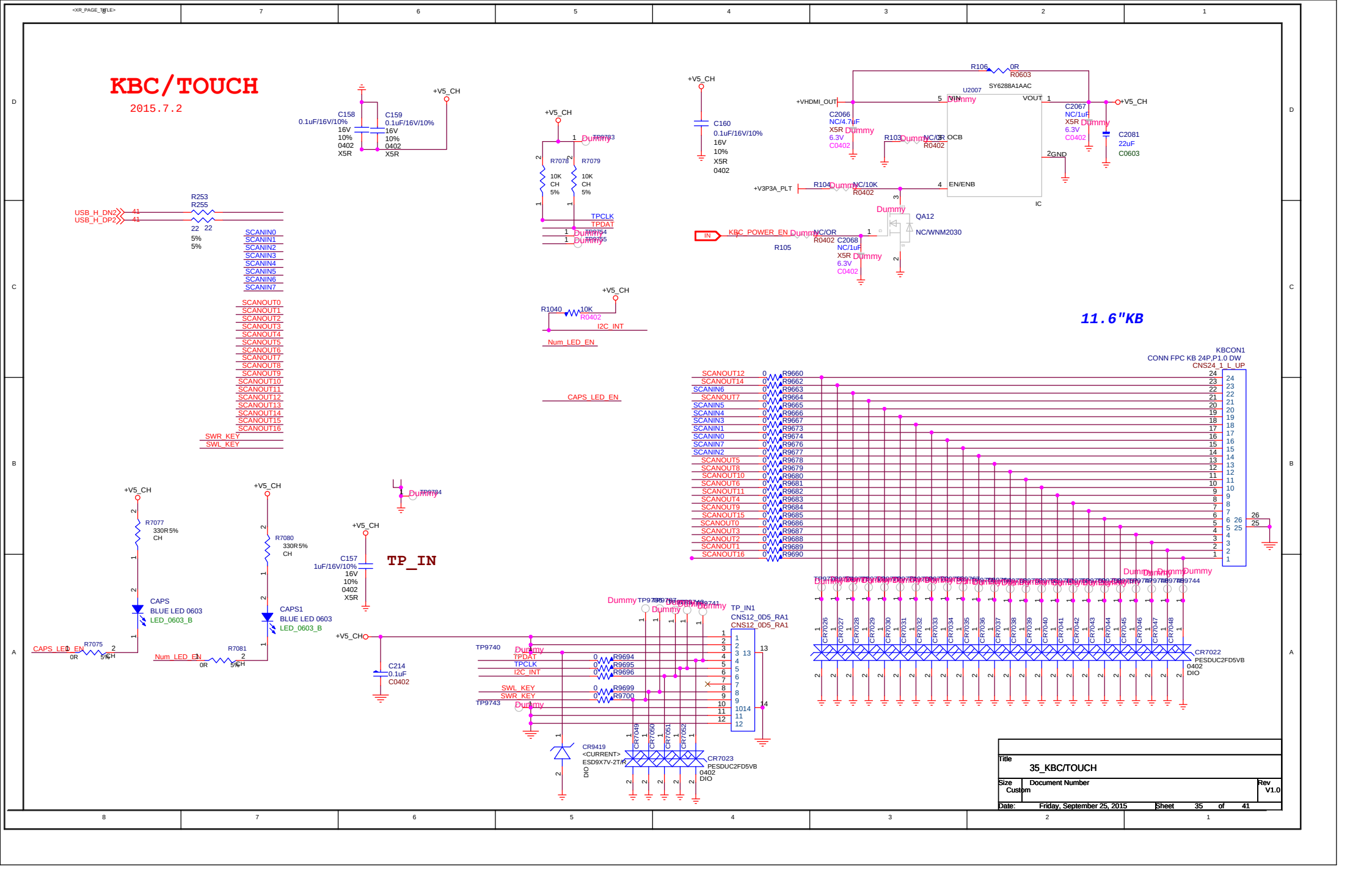
KBC/TOUCH
2015.7.2
11.6"KB
TP_IN
KBCON1
CONN FPC KB 24P,P1.0 DW
CNS24_1_L_UP
U2007
SY6288A1AAC
IC
QA12
NC/WNM2030
CR7022
PESDUC2FD5VB
0402
DIO
CR7023
PESDUC2FD5VB
0402
DIO
CR9419
<CURRENT>
ESD9X7V-2T/R
TP_IN1
CNS12_0D5_RA1
CNS12_0D5_RA1
Title
35_KBC/TOUCH
Size
Custom
Document Number
Rev
V1.0
Date:
Friday, September 25, 2015
Sheet
35
of
41

LED+

MFG TEST POINTS, SHIELDS & MOUNTING HOLES

TPS SHOULD BE PLACED CLOSE TO DEBUG CONNECTOR

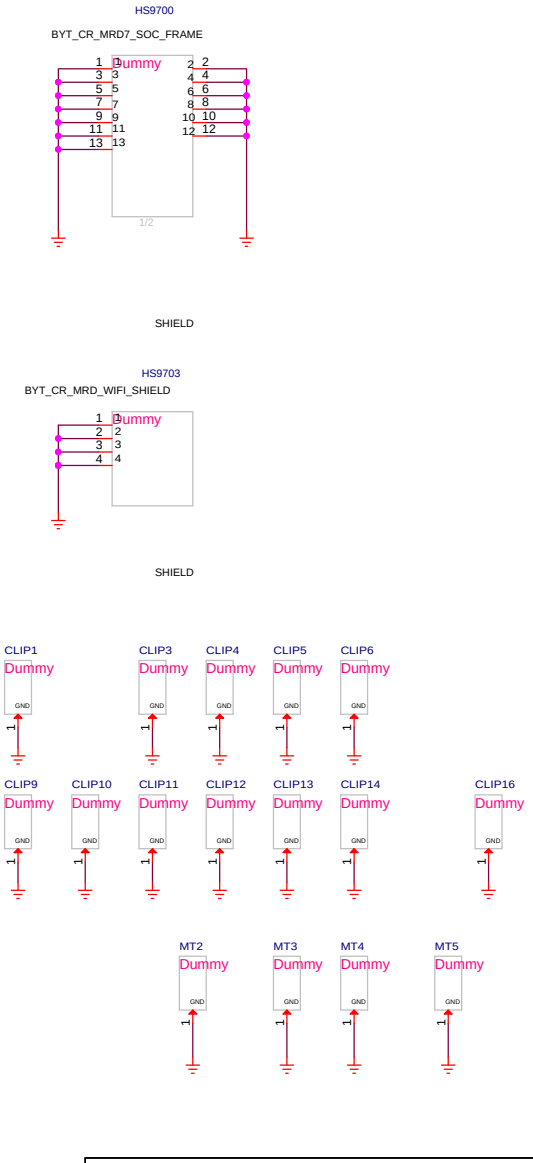

Title	36_MFG TEST POINTS, SHIELDS & M
Size: Custom	Document Number	Rev: V1.0
Date: Monday, August 24, 2015	Sheet 36 of 41

GPS

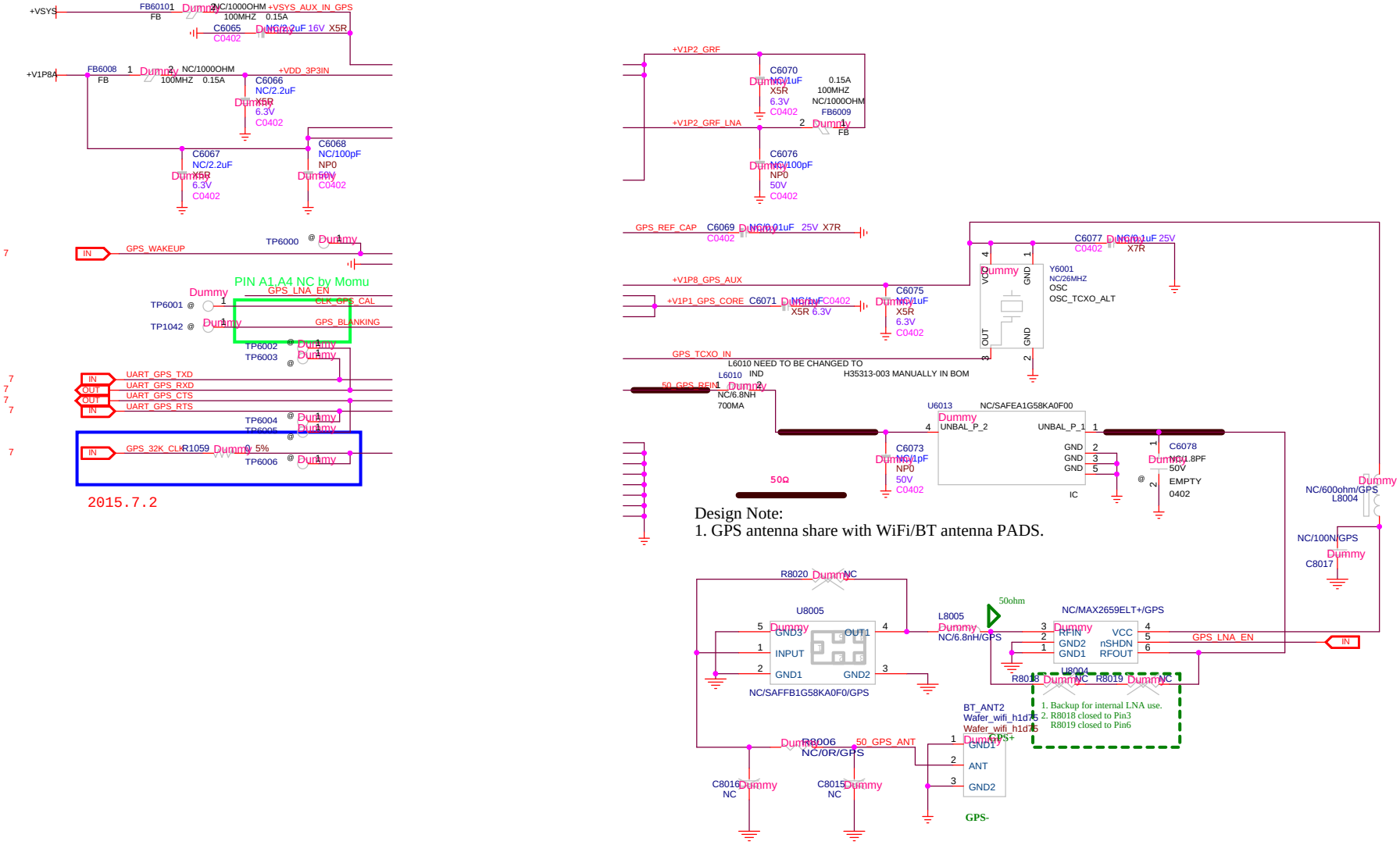

Design Note:
1. GPS antenna share with WiFi/BT antenna PADS.

Title	38_GPS
Size	Custom
Document Number	
Rev	V1.0
Date:	Friday, September 25, 2015
Sheet	38 of 41

HUB

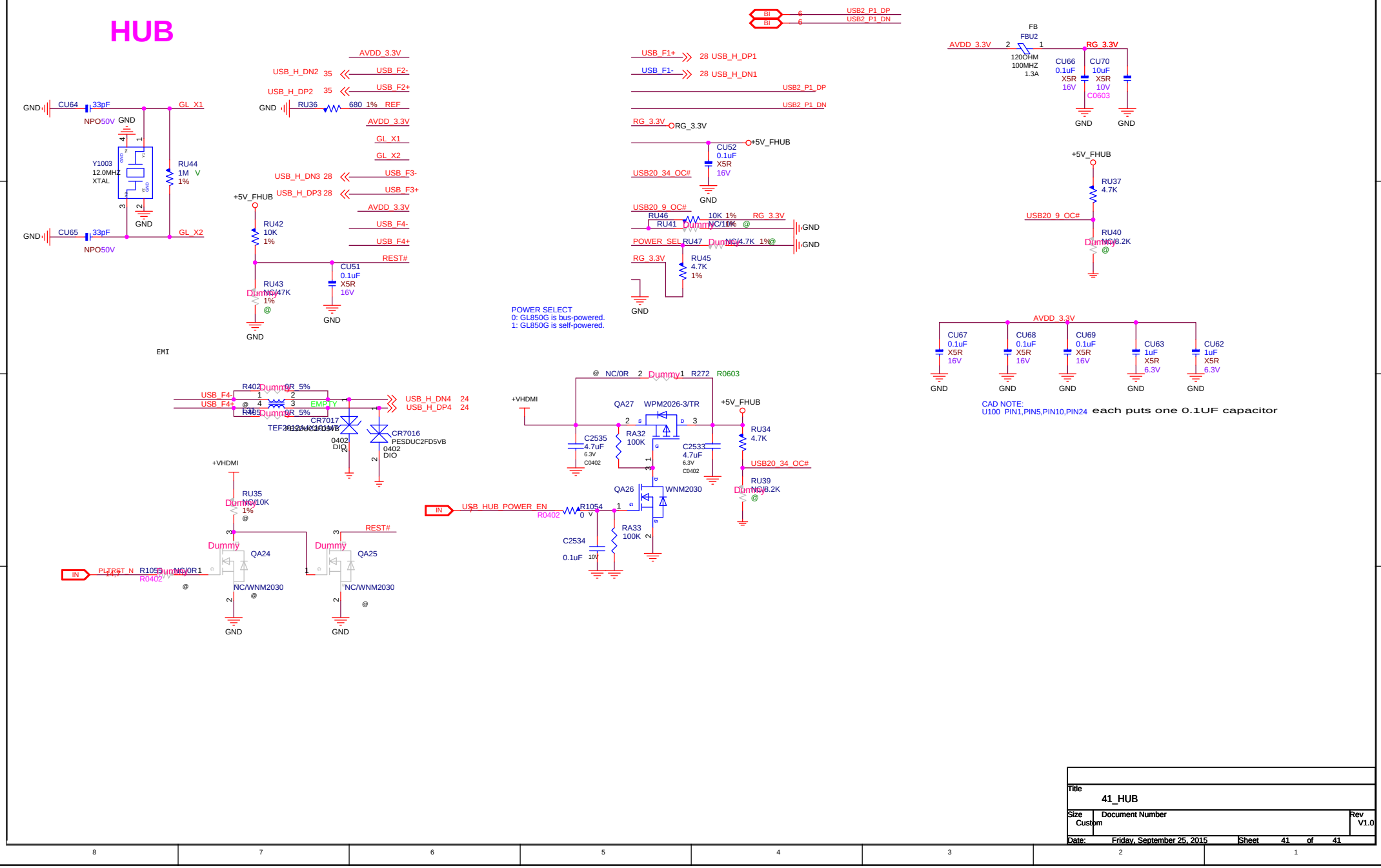

Title	41_HUB		
Size Custom	Document Number		Rev V1.0
Date: Friday, September 25, 2015		Sheet 41 of 41	