SH5410 WIRING DIAGRAM
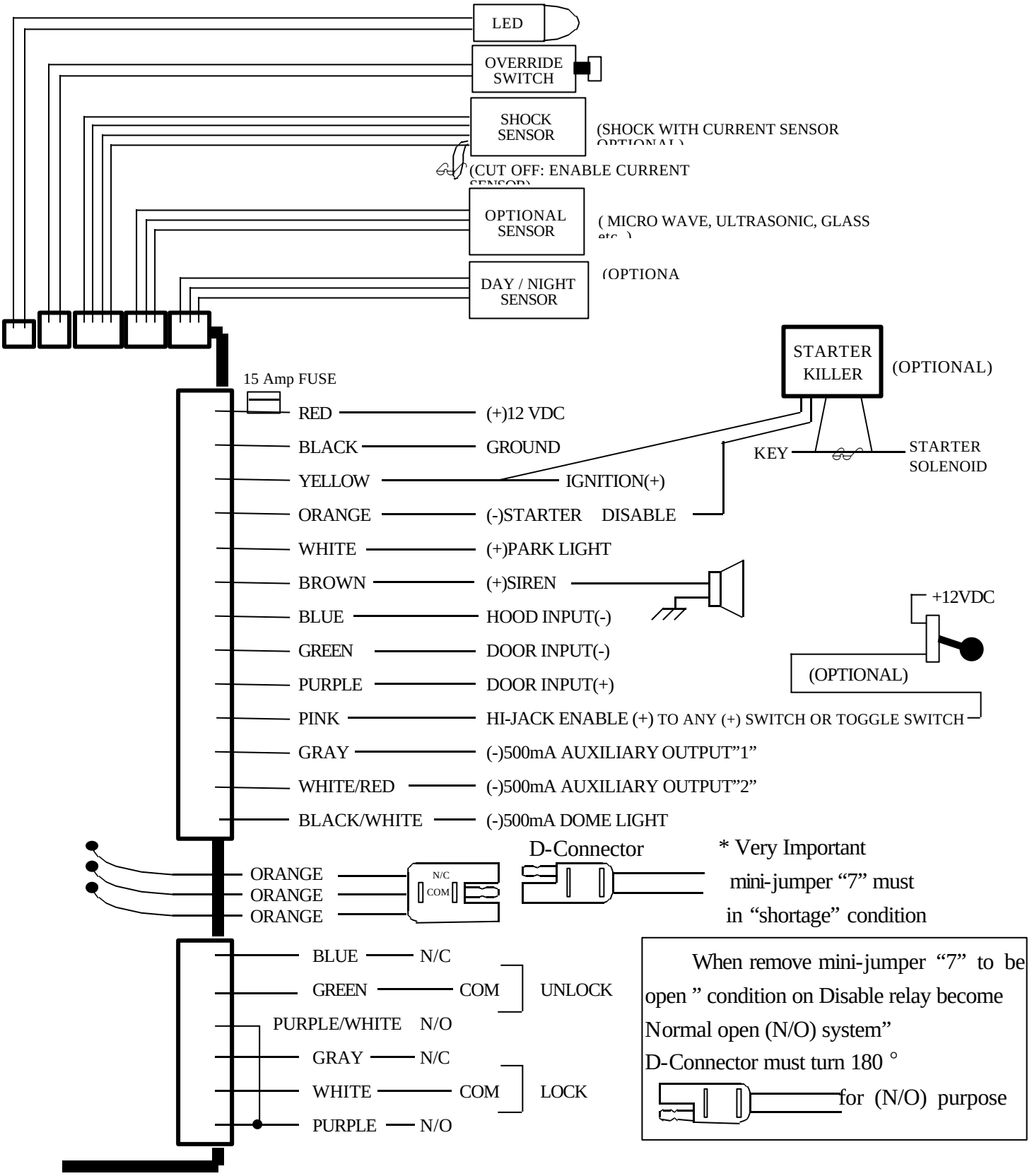
(F1WE-2)
(HI-JACK)