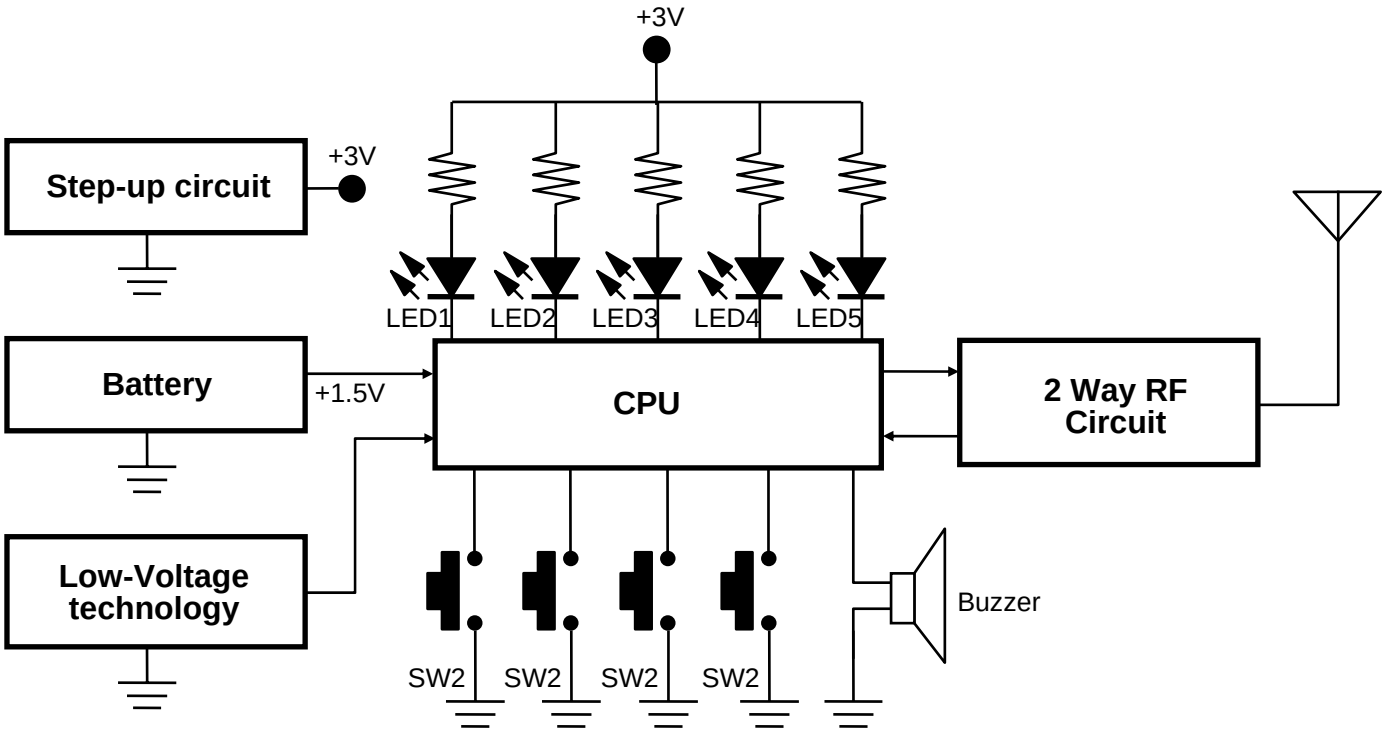AF42ED Chart