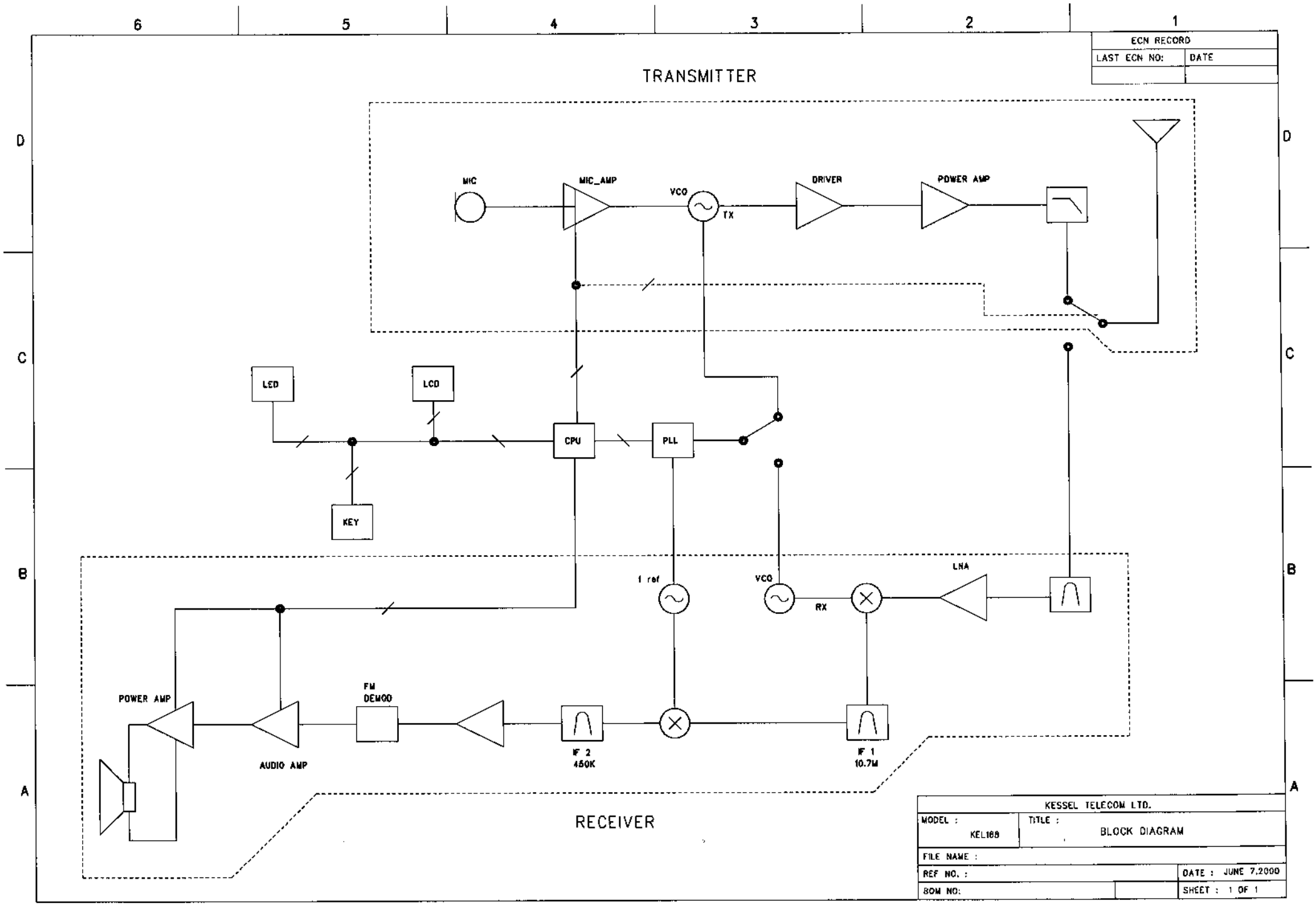
ECN RECORD
LAST ECN NO:
DATE
TRANSMITTER
MIC
MIC_AMP
VCO
TX
DRIVER
POWER AMP
LED
LCD
CPU
PLL
KEY
1 ref
VCO
RX
LNA
POWER AMP
AUDIO AMP
FM DEMOD
IF 2 450K
IF 1 10.7M
RECEIVER
KESSEL TELECOM LTD.
MODEL :
KEL168
TITLE :
BLOCK DIAGRAM
FILE NAME :
REF NO. :
DATE : JUNE 7,2000
BOM NO:
SHEET : 1 OF 1