Sample Data

Product Name : ANTB24-043A0
Frequency : 2.4～2.5GHz
Cable : L=83 (U-FL, φ0.8)

【NOTE】

Frequency	VSWR	Average Gain[dBi]						Total Avg. Gain [d.]
		Z-X Plane		Z-Y Plane		X-Y Plane		
		V	H	V	H	V	H	
2.4GHz	1.08	-1.9	-11.1	-12.2	-3.7	-7.7	-6.1	-5.7
2.45GHz	1.14	-1.1	-10.6	-12.9	-2.5	-6.9	-5.5	-4.9
2.5GHz	1.30	-0.7	-11.2	-13.3	-2.3	-6.5	-5.9	-4.7

【DATA】

PAGE	
2	VSWR
3	Measurement Condition
4	Directivity／Gain(2.4GHz)
5	Directivity／Gain(2.45GHz)
6	Directivity／Gain(2.5GHz)

SANSEI ELECTRIC CO.,LTD.
11-13, 5-CHOME, EBARA, SHINAGAWA-KU, TOKYO, JAPAN
TEL 03-3784-5103
FAX 03-5749-7270

12-Sep-05

APVD.	CHKD.	DSND.
技術部 '05.9.22 渡辺	技術 05.9.22 清藤	技術 05.9.22 櫻井

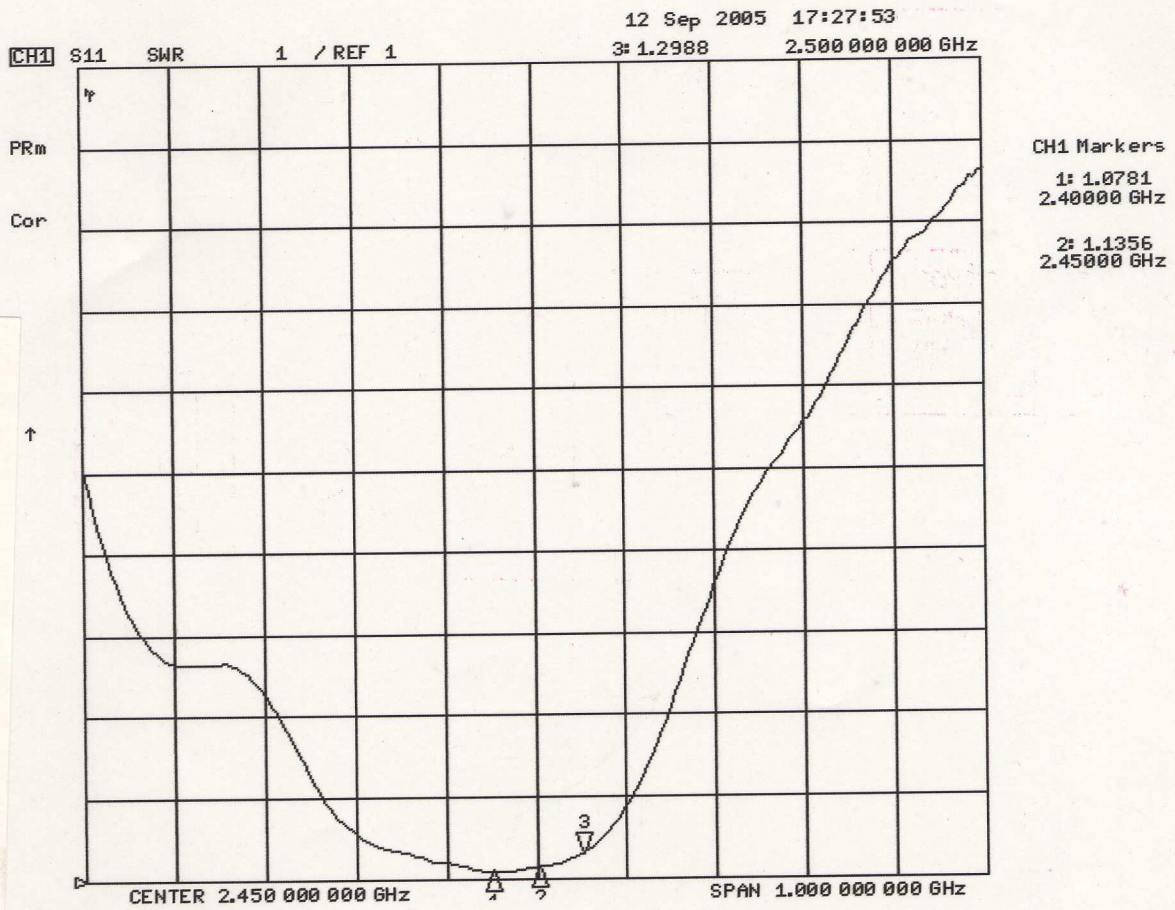
12 Sep 2005 17:27:53
CH1 S11 SWR 1 / REF 1
3: 1.2988
2.500 000 000 GHz
PRm
Cor
CH1 Markers
1: 1.0781
2.40000 GHz
2: 1.1356
2.45000 GHz
3
CENTER 2.450 000 000 GHz
SPAN 1.000 000 000 GHz

Mesurement Environment Condition

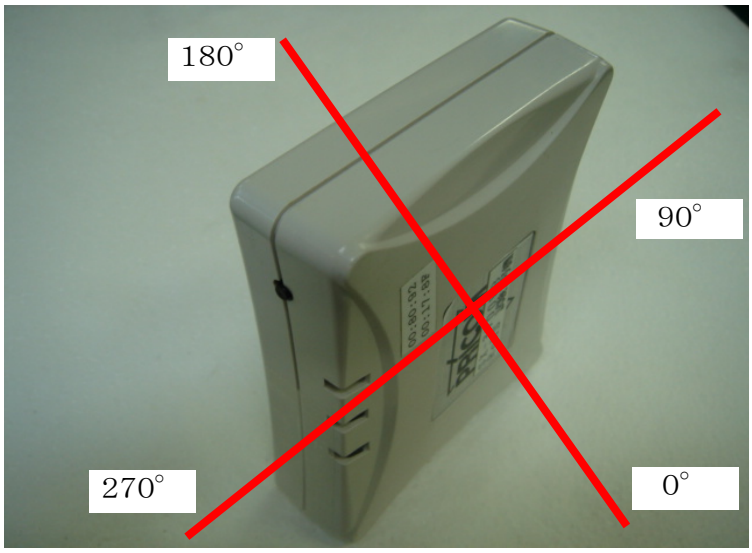

fig.1 Vertical Plane F／B Patte

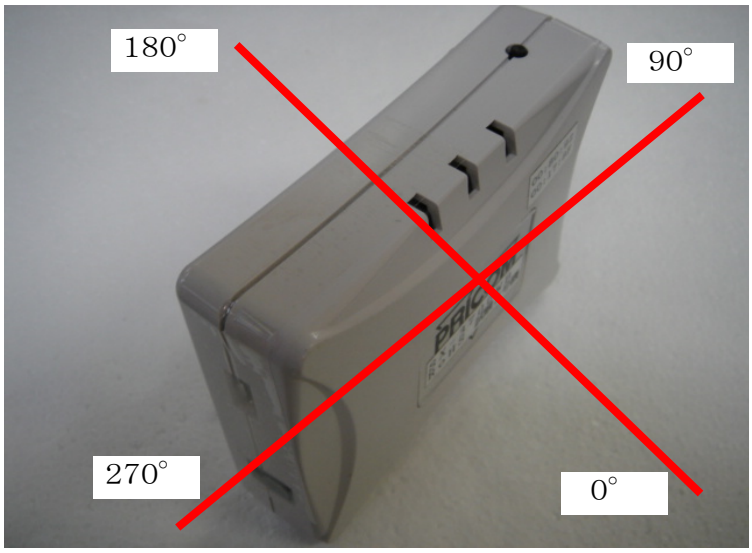

fig.2 Vertical Plane L/R Patter

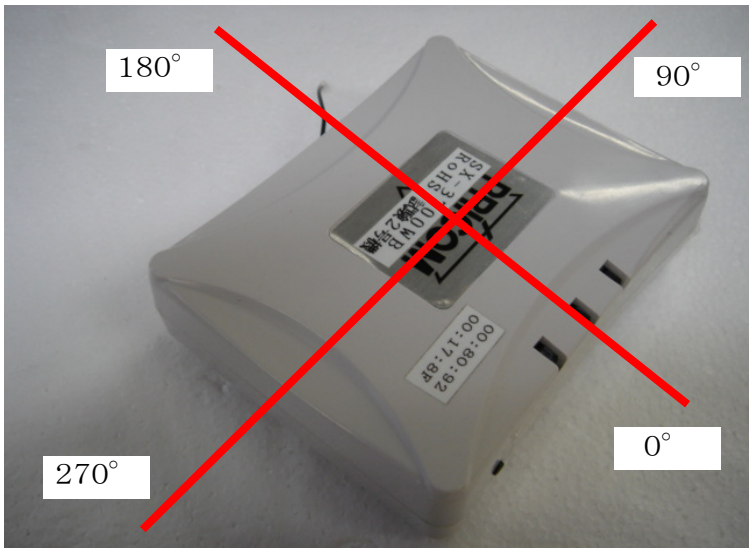

fig.3 Horizontal Plane Pattern

Directivity／Gain

Polarization : V
Frequency : 2400 MHz
Standard Antenna Level : −51.4 dBm
Antenna Gain : 3.7 dBd (5.8 dBi)
Average Gain : −4.0 dBd (−1.9 dBi)

Vertical Plane F／B Pattern
(Z-X PLANE)

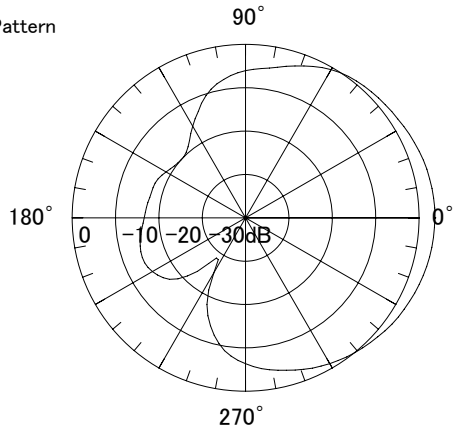

Polarization : H
Frequency : 2400 MHz
Standard Antenna Level : −51.4 dBm
Antenna Gain : −8.8 dBd (−6.6 dBi)
Average Gain : −13.2 dBd (−11.1 dBi)

Vertical Plane F／B Pattern
(Z-X PLANE)

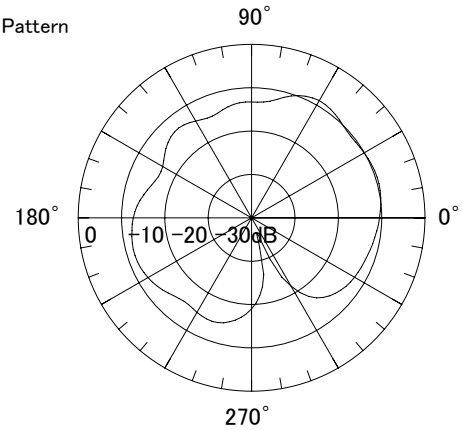

Polarization : V
Frequency : 2400 MHz
Standard Antenna Level: −51.4 dBm
Antenna Gain : −7.0 dBd (−4.9 dBi)
Average Gain : −14.4 dBd (−12.2 dBi)

Vertical Plane L/R Pattern
(Z-Y PLANE)

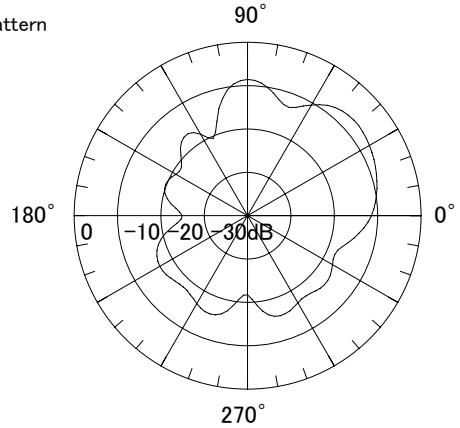

Polarization : H
Frequency : 2400 MHz
Standard Antenna Level: −51.4 dBm
Antenna Gain : 2.2 dBd (4.4 dBi)
Average Gain : −5.9 dBd (−3.7 dBi)

Vertical Plane L/R Pattern
(Z-Y PLANE)

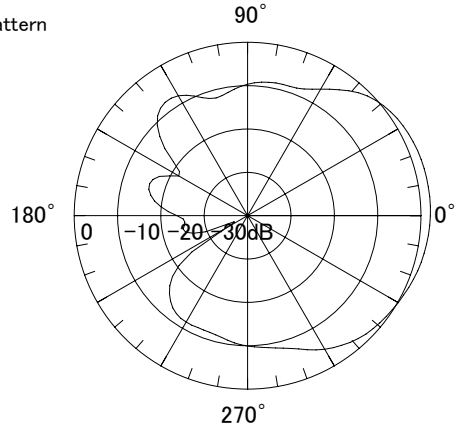

Polarization : V
Frequency : 2400 MHz
Standard Antenna Level: −51.4 dBm
Antenna Gain : −4.2 dBd (−2.1 dBi)
Average Gain : −9.9 dBd (−7.7 dBi)

Horizontal Plane Pattern
(X-Y PLANE)

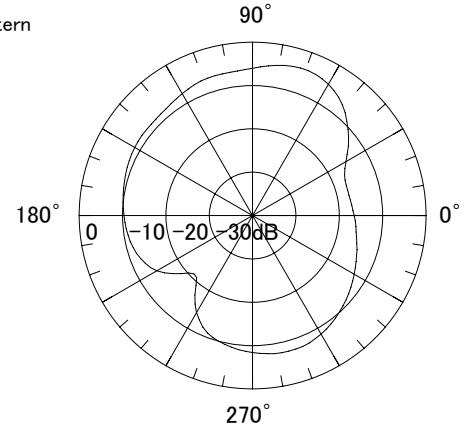

Polarization : H
Frequency : 2400 MHz
Standard Antenna Level: −51.4 dBm
Antenna Gain : −3.0 dBd (−0.8 dBi)
Average Gain : −8.2 dBd (−6.1 dBi)

Horizontal Plane Pattern
(X-Y PLANE)

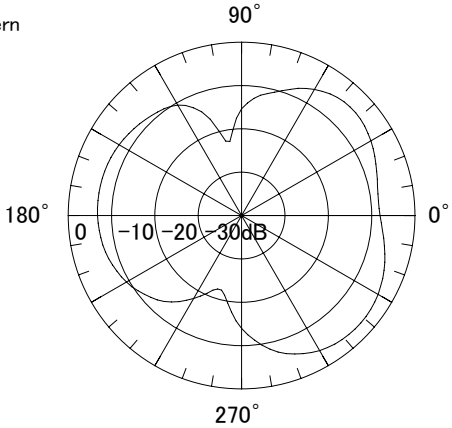

Directivity／Gain

Polarization : V
Frequency : 2450 MHz
Standard Antenna Level: −51.5 dBm
Antenna Gain : 4.7 dBd (6.8 dBi)
Average Gain : −3.2 dBd (−1.1 dBi)

Vertical Plane **F／B** Pattern
(Z-X PLANE)

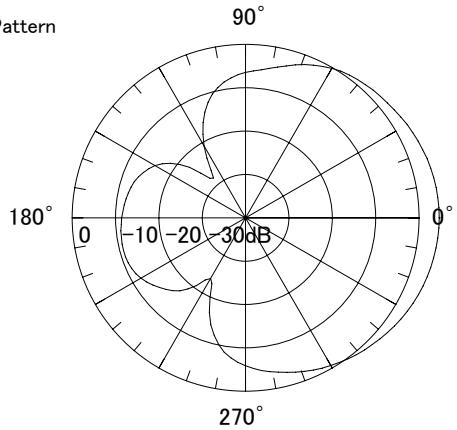

Polarization : H
Frequency : 2450 MHz
Standard Antenna Level: −51.5 dBm
Antenna Gain : −8.0 dBd (−5.9 dBi)
Average Gain : −12.7 dBd (−10.6 dBi)

Vertical Plane **F／B** Pattern
(Z-X PLANE)

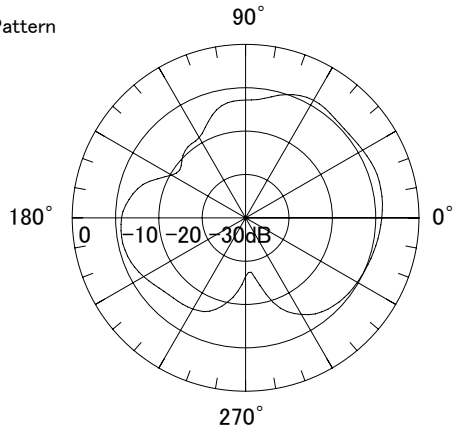

Polarization : V
Frequency : 2450 MHz
Standard Antenna Level: −51.5 dBm
Antenna Gain : −8.0 dBd (−5.8 dBi)
Average Gain : −15.0 dBd (−12.9 dBi)

Vertical Plane L/R Pattern
(Z-Y PLANE)

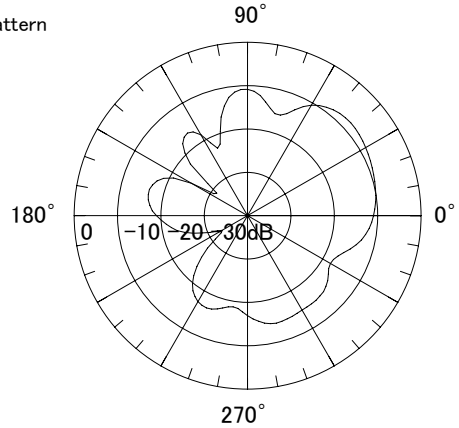

Polarization : H
Frequency : 2450 MHz
Standard Antenna Level: −51.5 dBm
Antenna Gain : 3.3 dBd (5.4 dBi)
Average Gain : −4.7 dBd (−2.5 dBi)

Vertical Plane L/R Pattern
(Z-Y PLANE)

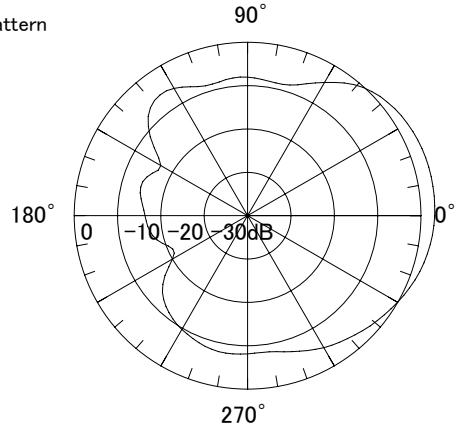

Polarization : V
Frequency : 2450 MHz
Standard Antenna Level: −51.5 dBm
Antenna Gain : −3.9 dBd (−1.8 dBi)
Average Gain : −9.0 dBd (−6.9 dBi)

Horizontal Plane Pattern
(X-Y PLANE)

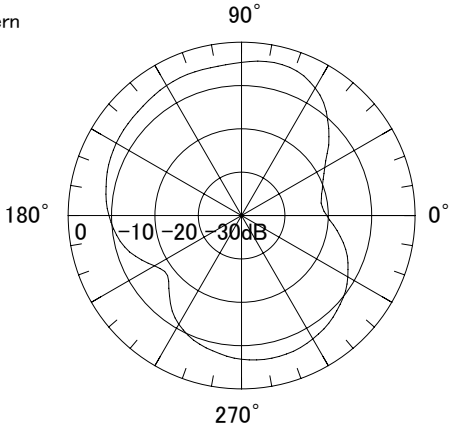

Polarization : H
Frequency : 2450 MHz
Standard Antenna Level: −51.5 dBm
Antenna Gain : −2.7 dBd (−0.6 dBi)
Average Gain : −7.7 dBd (−5.5 dBi)

Horizontal Plane Pattern
(X-Y PLANE)

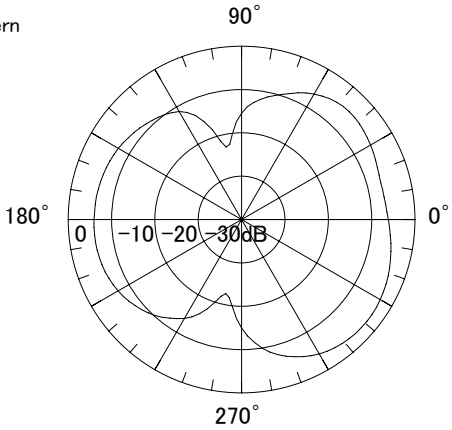

Directivity／Gain

Polarization : V
Frequency : 2500 MHz
Standard Antenna Level: −51.0 dBm
Antenna Gain : 4.9 dBd (7.0 dBi)
Average Gain : −2.9 dBd (−0.7 dBi)

Vertical Plane F／B Pattern
(Z-X PLANE)

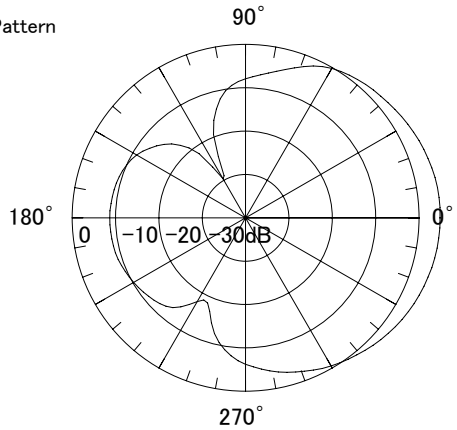

Polarization : H
Frequency : 2500 MHz
Standard Antenna Level: −51.0 dBm
Antenna Gain : −8.7 dBd (−6.6 dBi)
Average Gain : −13.3 dBd (−11.2 dBi)

Vertical Plane F／B Pattern
(Z-X PLANE)

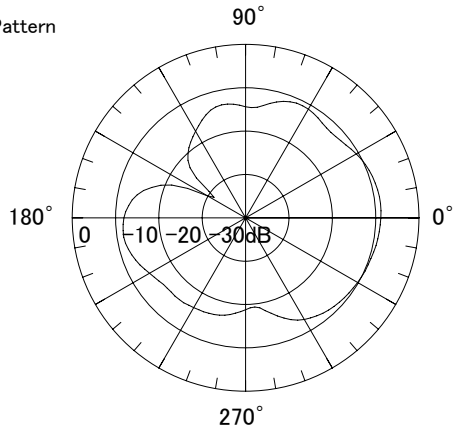

Polarization : V
Frequency : 2500 MHz
Standard Antenna Level: −51.0 dBm
Antenna Gain : −8.7 dBd (−6.6 dBi)
Average Gain : −15.4 dBd (−13.3 dBi)

Vertical Plane L/R Pattern
(Z-Y PLANE)

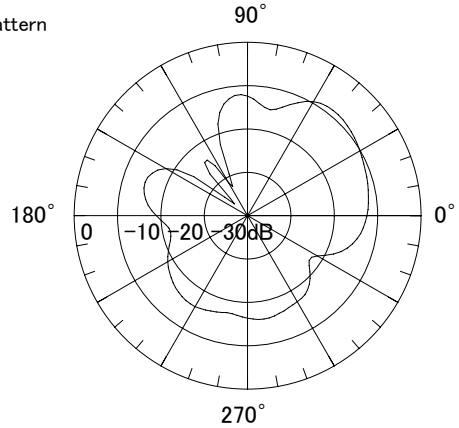

Polarization : H
Frequency : 2500 MHz
Standard Antenna Level: −51.0 dBm
Antenna Gain : 3.6 dBd (5.7 dBi)
Average Gain : −4.5 dBd (−2.3 dBi)

Vertical Plane L/R Pattern
(Z-Y PLANE)

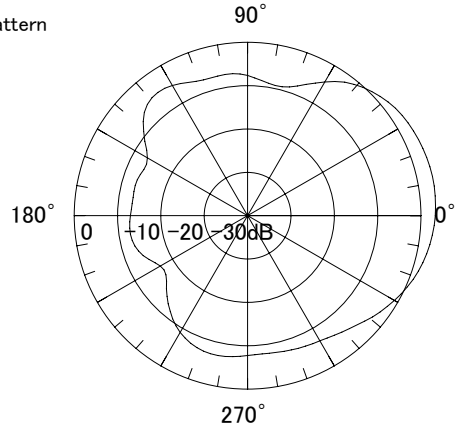

Polarization : V
Frequency : 2500 MHz
Standard Antenna Level: −51.0 dBm
Antenna Gain : −4.1 dBd (−2.0 dBi)
Average Gain : −8.6 dBd (−6.5 dBi)

Horizontal Plane Pattern
(X-Y PLANE)

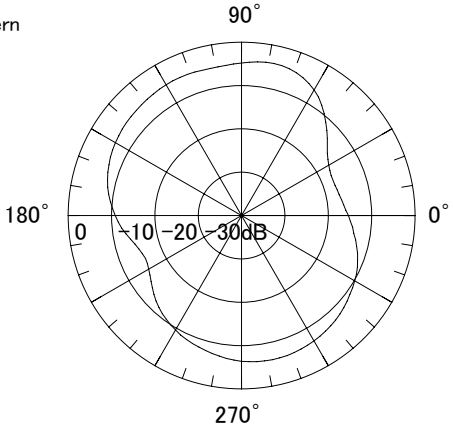

Polarization : H
Frequency : 2500 MHz
Standard Antenna Level: −51.0 dBm
Antenna Gain : −2.6 dBd (−0.5 dBi)
Average Gain : −8.0 dBd (−5.9 dBi)

Horizontal Plane Pattern
(X-Y PLANE)

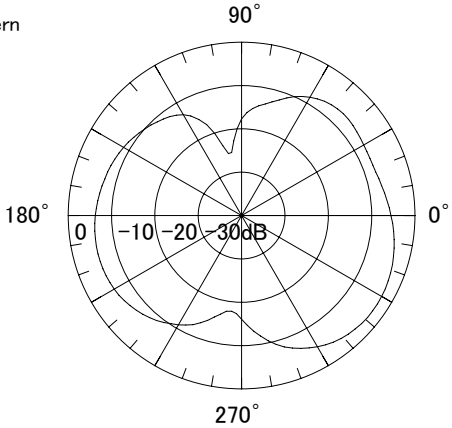

PRODUCT CODE

TB24043A0J0

参考図

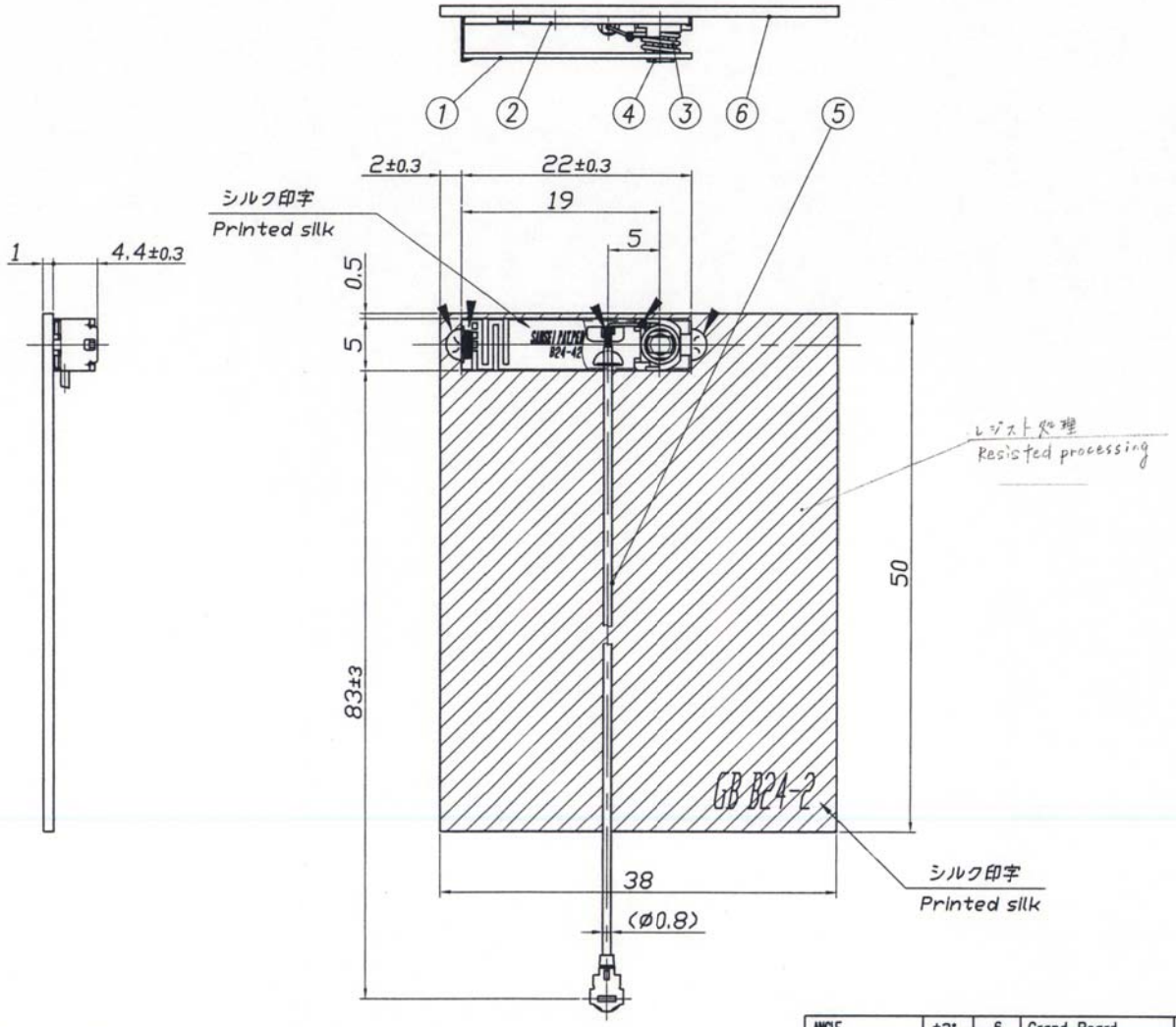

出図
'05.9.26
三省電機株式会社

承認	担当
技術部 '05.9.26 渡辺	技術 05.9.26 佐藤(M)

注記

NOTICE:

1）製品仕様書はＡＮＴ－Ｓ－７９３による。

Specification : ANT-S-793

2）コネクター仕様：ヒロセ電機製／U.FL－LP－040

Specification of connector :HIROSE ERECTRIC CO.,LTD/U.FL-LP-040

3）ケーブル仕様：日星電気製／ＲＦ－ＭＦ５０１０（シロ）

Specification of cable:NISSEI ELECTRIC Co.,LTD/RF-MF5010 (White)

4）◢ 部５箇所はハンダ付け （無鉛ハンダ）

◢ Five places are soldered (Nonlead solder)

ANGLE	±3°	6	Grand Board	1	Glass fabric base epoxy resin	t=1
ABOVE 100	±0.8	5	Cable	1	Coaxial Cables	Reference the note2,3
ABOVE 50 TO 100	±0.5	4	Guide Pin	1	Exchanged component PPO	Noryl color:gray
ABOVE 5 TO 50	±0.3	3	Element	1	CP15	ø0.4
UP TO 50	±0.2	2	Case	1	SPTE	Tinplate t=0.2
TOLERANCES UNLESS OTHERWISE SPEC.		1	Print Board	1	Glass fabric base epoxy resin	t=0.5
		LTR	PART NAME	QTY	MATERIAL	REMARK

MARK	SYME	DESCRIPION	DATE	APVD.
△				

PROJ.	UNIT	SCALE	製品名	MODEL No.
	mm	2/1		ANTB24-043A0
APVD.	CHKD.	DSGD.	図名	TITLE PRODUCT DRAWING
技術部 '05.9.26 渡辺	設術 05.9.26 佐藤(M)	技術 '05.9.26 根岸	図番	DRAWING No. C05S0914

SANSEI ELECTRIC CO.,LTD.