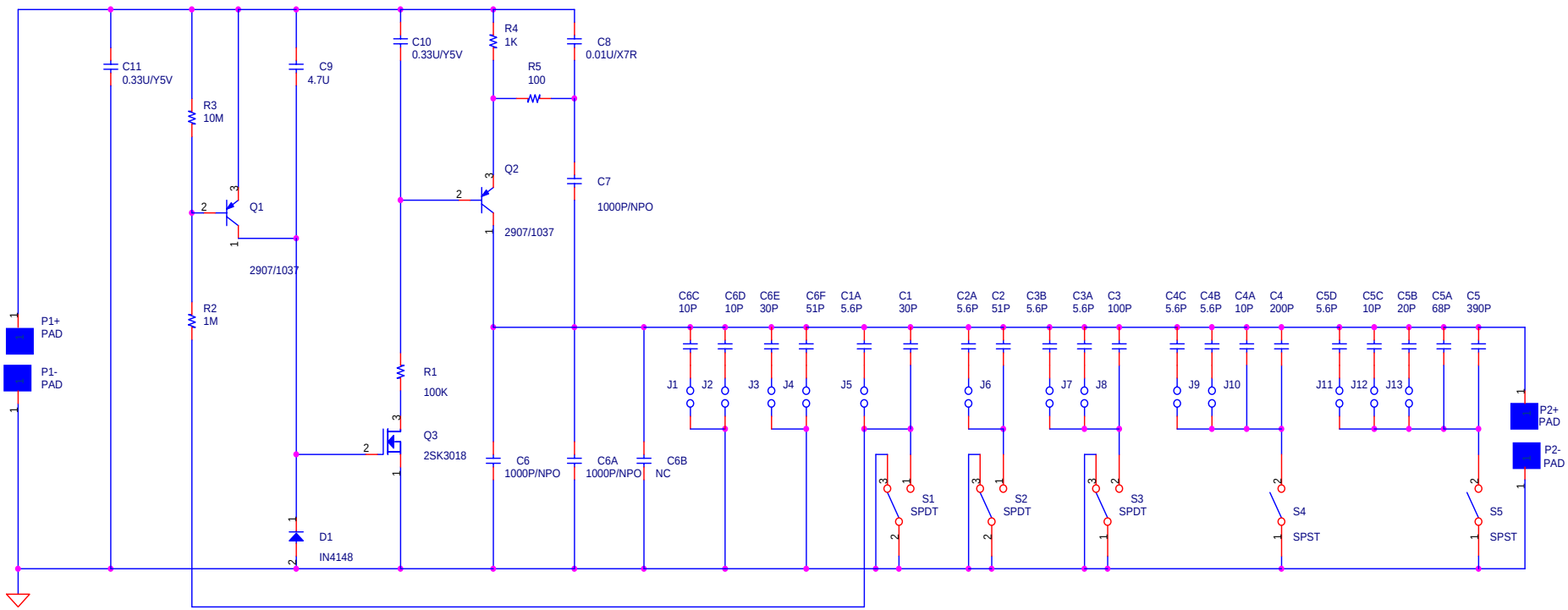Electronic Circuit