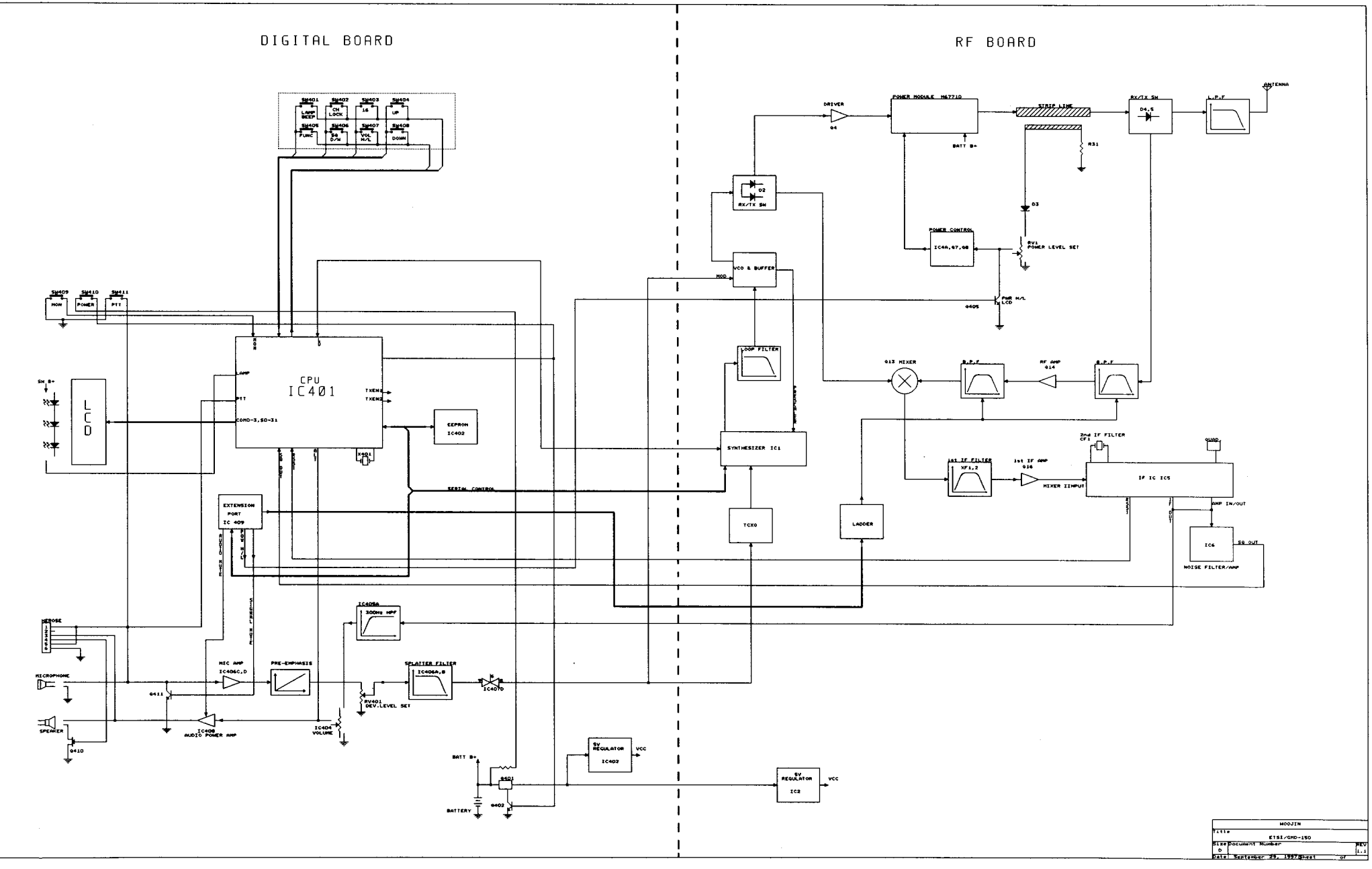
DIGITAL BOARD
RF BOARD
SW401 LAMP BEEP
SW402 CH LOCK
SW403 16
SW404 UP
SW405 FUNC
SW406 SQ D/M
SW407 VOL H/L
SW408 DOWN
SW409 MON
SW410 POWER
SW411 PTT
CPU IC401
LCD
EEPROM IC402
EXTENSION PORT IC 409
SERIAL CONTROL
SYNTHESIZER IC1
LOOP FILTER
VCO & BUFFER
RX/TX SW
TCXO
LADDER
DRIVER
Q4
POWER MODULE M67710
BATT B+
STRIP LINE
R31
D3
POWER CONTROL
IC4A,07,08
RV1 POWER LEVEL SET
PWR M/L LCD
Q405
RX/TX SW
D4,5
L.P.F
ANTENNA
Q13 MIXER
B.P.F
RF AMP Q14
B.P.F
2nd IF FILTER CF1
1st IF FILTER XF1,2
1st IF AMP Q16
MIXER IINPUT
IF IC IC5
QUAD
AMP IN/OUT
IC6
SQ OUT
NOISE FILTER/AMP
IC405A 300Hz HPF
SPLATTER FILTER IC406A,B
IC407D
RV401 DEV.LEVEL SET
PRE-EMPHASIS
MIC AMP IC406C,D
Q411
IC408 AUDIO POWER AMP
IC404 VOLUME
MICROPHONE
SPEAKER
Q410
MIC/SPK
BATT B+
BATTERY
RS01
Q402
5V REGULATOR IC402
VCC
5V REGULATOR IC2
VCC
MOOJIN
Title ETSI/GHD-150
Size Document Number REV
D 1.1
Date: September 29, 1997 Sheet of