TABULATION	
DASH NO.	DESCRIPTION
-0003	AS SHOWN

REVISION TABLE

REVISION
AM

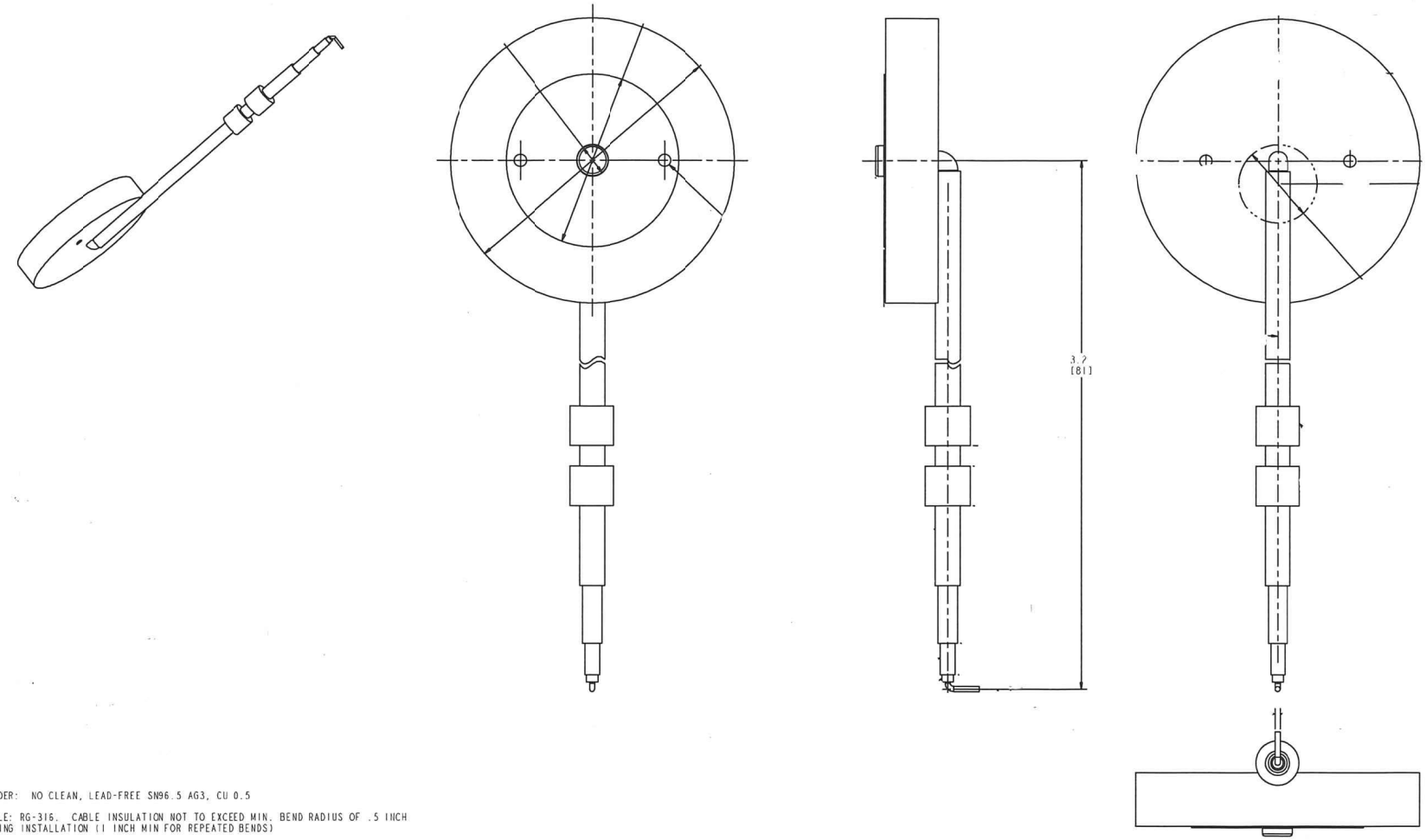

4 SOLDER: NO CLEAN, LEAD-FREE SN96.5 AG3, CU 0.5

3 CABLE: RG-316. CABLE INSULATION NOT TO EXCEED MIN. BEND RADIUS OF .5 INCH DURING INSTALLATION (1 INCH MIN FOR REPEATED BENDS)

2 NO MATERIAL/SUPPLIER SUBSTITUTIONS WITHOUT ROSEMOUNT APPROVAL.

1 THE SPECIFICATIONS IN THIS NOTE ARE FOR THE ANTENNA PERFORMANCE IN A COMPLETE POTTED THUM. IT IS UNDERSTOOD THAT THE ANTENNA WILL BE 100% TESTED TO THE MANUFACTURER'S DETERMINED PARAMETERS IN "FREE SPACE" TO ENSURE THE PERFORMANCE SHOWN BELOW IN A POTTED THUM

ELECTRICAL CHARACTERISTICS:

VSWR LIMIT: 2:1 MAX
NOMINAL IMPEDANCE: 50 OHMS
NOMINAL GAIN: 2.0dBi
MANUFACTURING TOLERANCE: ±0.5dBi
FREQUENCY RANGE: 2.4-2.5GHz
MANUFACTURER: ROSEMOUNT
MODEL: 00775-2205
ANTENNA TYPE: DIPOLE

DRAWING NO. 00775-2205

TF FINISH UNLESS OTHERWISE SPECIFIED	3RD ANGLE	SIZE	SCALE	REV
√		D	1:1	AM

UNLESS OTHERWISE SPECIFIED DIMENSIONS IN INCHES (mm). REMOVE ALL BURRS AND SHARP EDGES.

-DEC TOLERANCES-
.X ± .1
.XX ± .02
.XXX ± .010
FRACTIONS ± 1/32
ANGLES ± 2°

EMERSON

ROSEMOUNT INC.
8200 INNOVATION BLVD
SHAKOPEE, MN 55379 USA

TITLE DISC ANTENNA ASSEMBLY 775 THUM

DRAWING NO. 00775-2205

DO NOT SCALE PRINT | CAD MAINTAINED, (PROV'D) | PRODUCT CODE | DOC TYPE | SHEET 1 OF 1

Electronic Master – PRINTED COPIES ARE UNCONTROLLED – Rosemount Proprietary