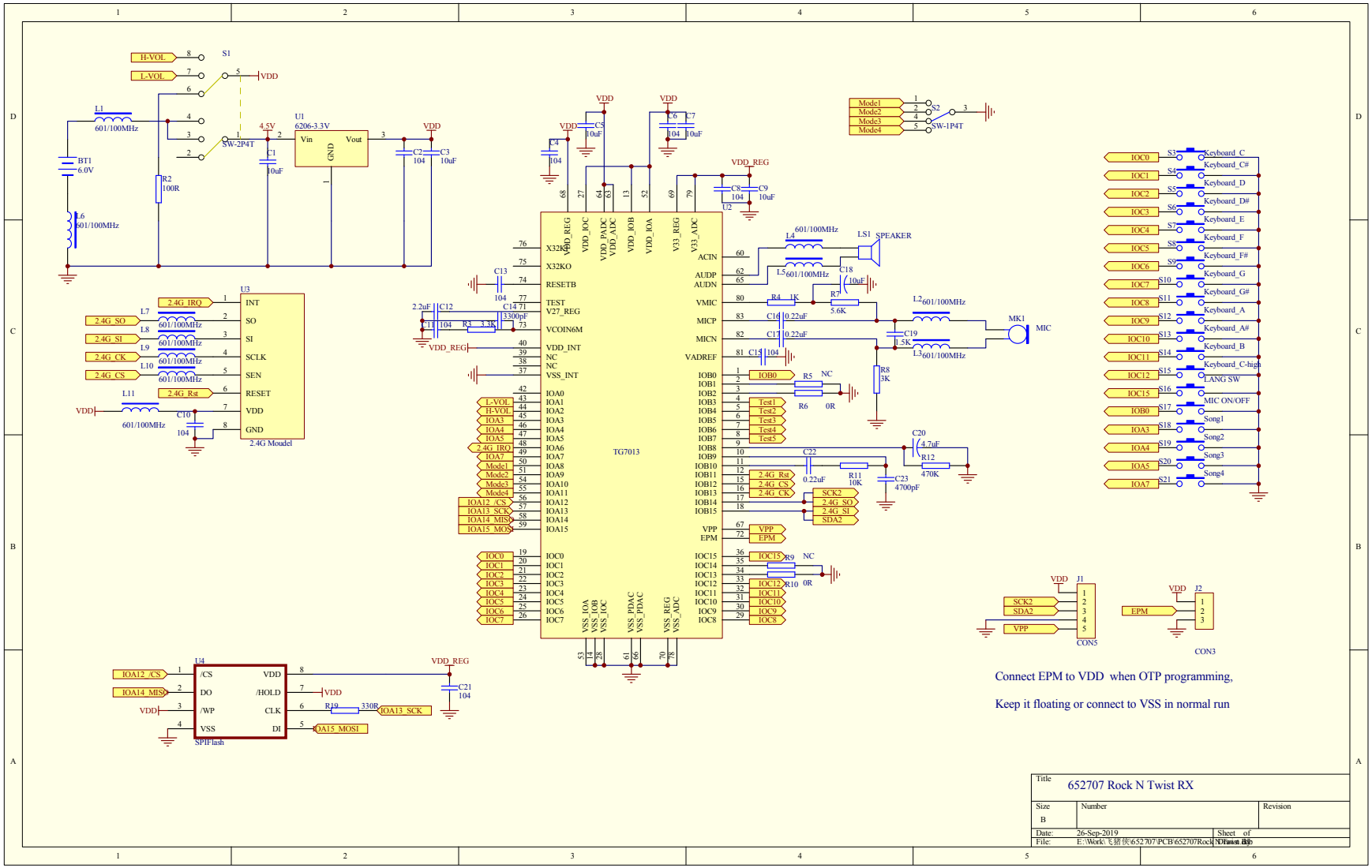
H-VOL
L-VOL
S1
VDD
SW-2P4T
L1
601/100MHz
BT1
6.0V
R2
100R
L6
601/100MHz
4.5V
C1
10uF
U1
6206-3.3V
Vin
Vout
GND
C2
104
C3
10uF
VDD_REG
C8
104
C9
10uF
U2
C4
104
C5
10uF
C6
104
C7
10uF
Mode1
Mode2
Mode3
Mode4
S2
SW-1P4T
L4
601/100MHz
LS1
SPEAKER
L5
601/100MHz
C18
10uF
R7
5.6K
R4
1K
C16
0.22uF
C17
0.22uF
L2
601/100MHz
MK1
MIC
C19
1.5K
L3
601/100MHz
R8
3K
C13
104
C12
2.2uF
C14
3300pF
R3
3.3K
C11
104
R5
NC
R6
0R
C20
4.7uF
R12
470K
C22
0.22uF
R11
10K
C23
4700pF
R9
NC
R10
0R
U3
2.4G_IRQ
2.4G_SO
2.4G_SI
2.4G_CK
2.4G_CS
2.4G_Rst
INT
SO
SI
SCLK
SEN
RESET
VDD
GND
2.4G Moudel
L7
L8
L9
L10
L11
C10
104
TG7013
X32KI
X32KO
RESETB
TEST
V27_REG
VCOIN6M
VDD_INT
NC
VSS_INT
IOA0
IOA1
IOA2
IOA3
IOA4
IOA5
IOA6
IOA7
IOA8
IOA9
IOA10
IOA11
IOA12
IOA13
IOA14
IOA15
IOC0
IOC1
IOC2
IOC3
IOC4
IOC5
IOC6
IOC7
VDD_REG
VDD_IOC
VDD_PADC
VDD_ADC
VDD_IOB
VDD_IOA
V33_REG
V33_ADC
ACIN
AUDP
AUDN
VMIC
MICP
MICN
VADREF
IOB0
IOB1
IOB2
IOB3
IOB4
IOB5
IOB6
IOB7
IOB8
IOB9
IOB10
IOB11
IOB12
IOB13
IOB14
IOB15
VPP
EPM
IOC15
IOC14
IOC13
IOC12
IOC11
IOC10
IOC9
IOC8
VSS_IOA
VSS_IOB
VSS_IOC
VSS_PDAC
VSS_PDAC
VSS_REG
VSS_ADC
Test1
Test2
Test3
Test4
Test5
SCK2
SDA2
IOA12_CS
IOA13_SCK
IOA14_MISO
IOA15_MOSI
U4
/CS
DO
/WP
VSS
VDD
/HOLD
CLK
DI
SPIFlash
R19
330R
C21
104
J1
CON5
J2
CON3
EPM
Keyboard_C
Keyboard_C#
Keyboard_D
Keyboard_D#
Keyboard_E
Keyboard_F
Keyboard_F#
Keyboard_G
Keyboard_G#
Keyboard_A
Keyboard_A#
Keyboard_B
Keyboard_C-high
LANG SW
MIC ON/OFF
Song1
Song2
Song3
Song4
Connect EPM to VDD when OTP programming,
Keep it floating or connect to VSS in normal run
Title
652707 Rock N Twist RX
Size
B
Number
Revision
Date: 26-Sep-2019
Sheet of
File: E:\Work\飞碧快\652707\PCB\652707Rock N Twist.Dd
Drawn By:

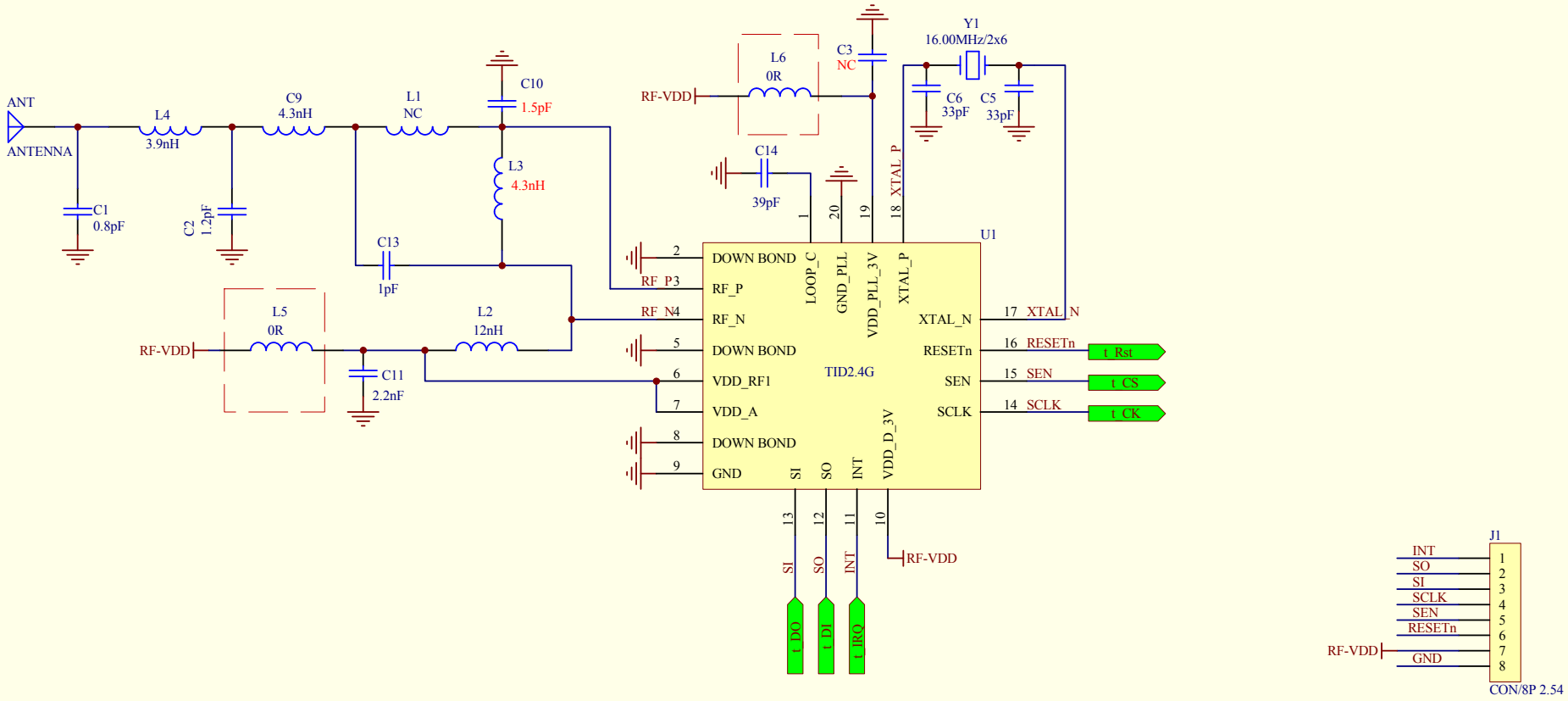

Title		
Size A4	Number	Revision
Date: 5-Nov-2019	Sheet of	
File: D:\WORK\出规格书&BOM\TWM2.4G Module\HB24~1.DDB	Drawn By:	