SCHEMATIC DIAGRAM

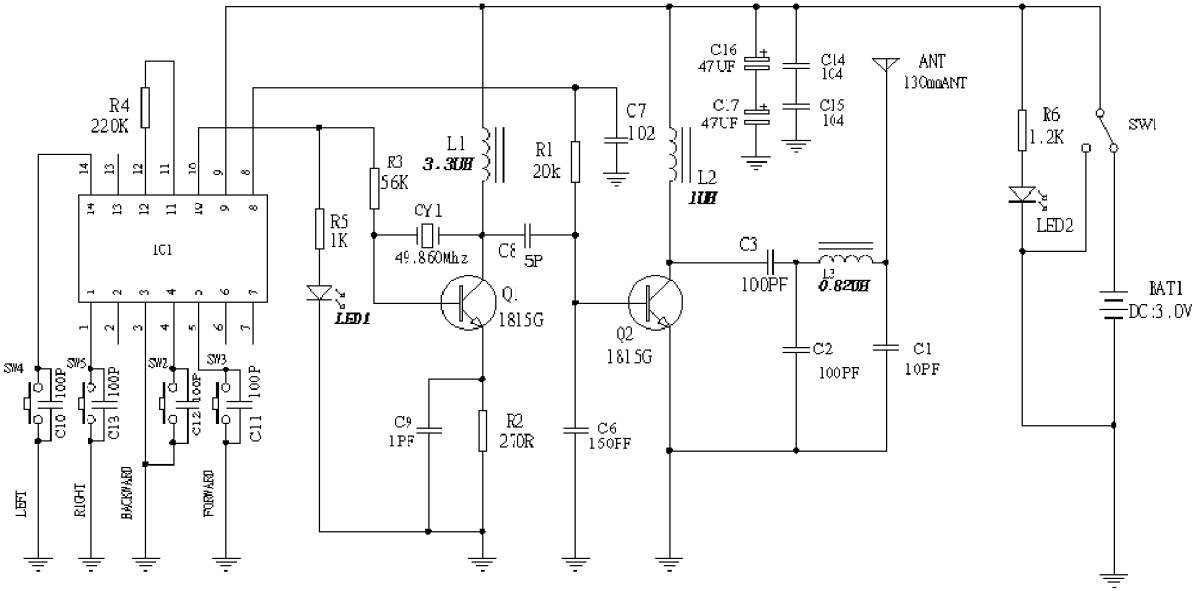

49.860M-TX

參數指標:

1) 整機工作電壓范圍: 2.4----3.2V
2) 整機動態工作電流: 22MA+/-4MA
3) 整機靜態工作電流: <3MA
4) 關機電流: <0MA

電氣參數

Sunlight ELECTRONIC TOYS MFR CO., LTD.	EN-051-01	Rev: 02	
	Page	Of	
	Drawn:	Date: 8-Oct-2002	
Product Number: 258933	Checked:	Date:	
Product Name: SHIP	Approved:	Date:	