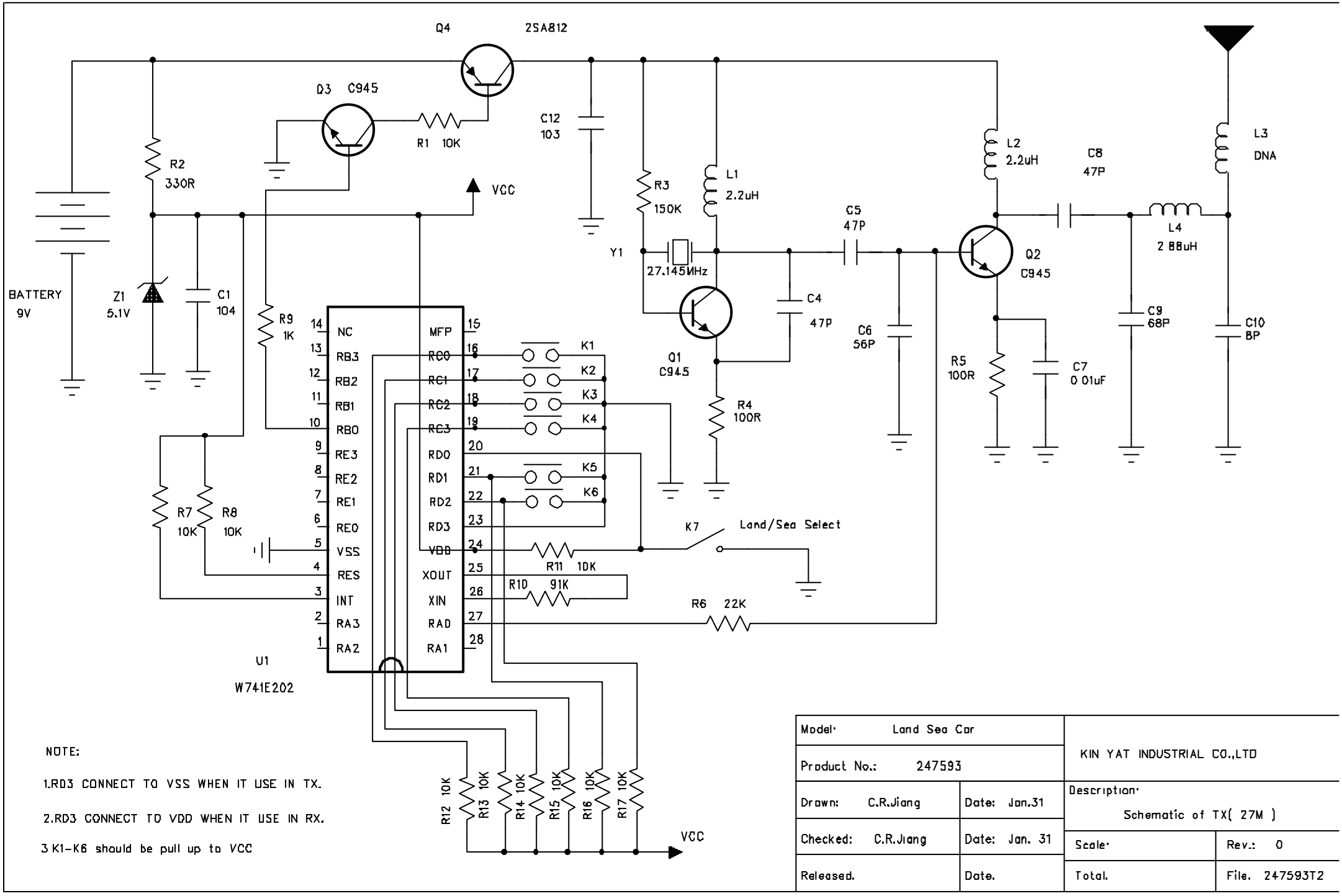

NOTE:

1.RD3 CONNECT TO VSS WHEN IT USE IN TX.

2.RD3 CONNECT TO VDD WHEN IT USE IN RX.

3.K1-K6 should be pull up to VCC

Model: Land Sea Car		KIN YAT INDUSTRIAL CO.,LTD	
Product No.: 247593			
Drawn: C.R.Jiang	Date: Jan.31	Description: Schematic of TX(27M)	
Checked: C.R.Jiang	Date: Jan. 31	Scale:	Rev.: 0
Released.	Date.	Total.	File. 247593T2