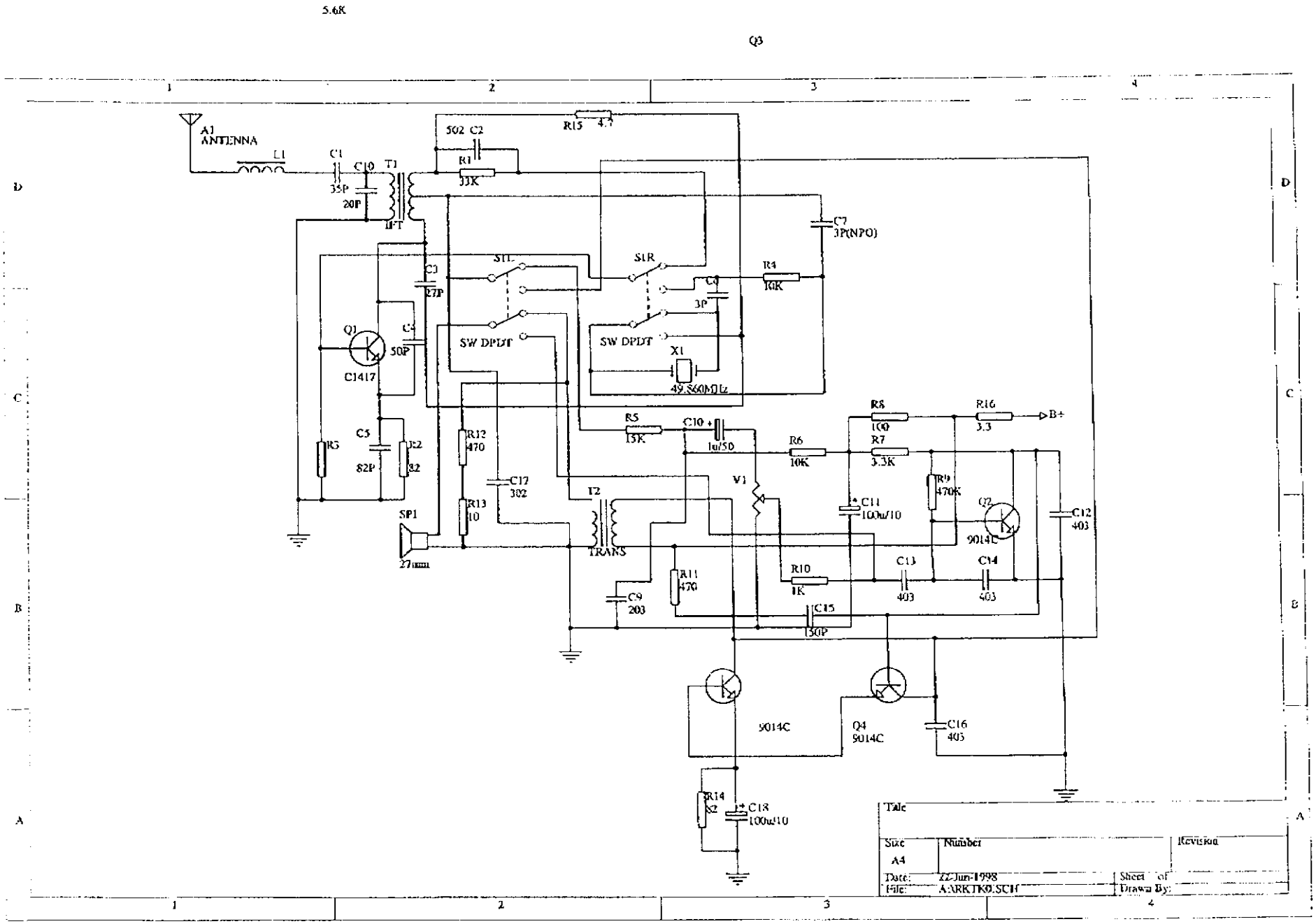
5.6K
Q3
A1
ANTENNA
L1
C1
35P
C10
20P
T1
IFT
502 C2
R1
33K
R15 4.7
C7
3P(NPO)
S1L
S1R
SW DPDT
SW DPDT
C8
3P
R4
10K
X1
49.860MHz
C3
27P
Q1
C1417
C4
50P
R3
C5
82P
R2
32
R12
470
C17
302
R13
10
SP1
27mm
T2
TRANS
R5
15K
C10
1u/50
R6
10K
V1
R8
100
R16
3.3
B+
R7
3.3K
R9
470K
C11
100u/10
Q2
9014C
C12
403
C13
403
C14
403
R10
1K
C15
50P
R11
470
C9
203
9014C
Q4
9014C
C16
403
R14
32
C18
100u/10
Title
Size
A4
Number
Revision
Date: 22-Jun-1998
File: A:\RKTK0.SCH
Sheet of
Drawn By: