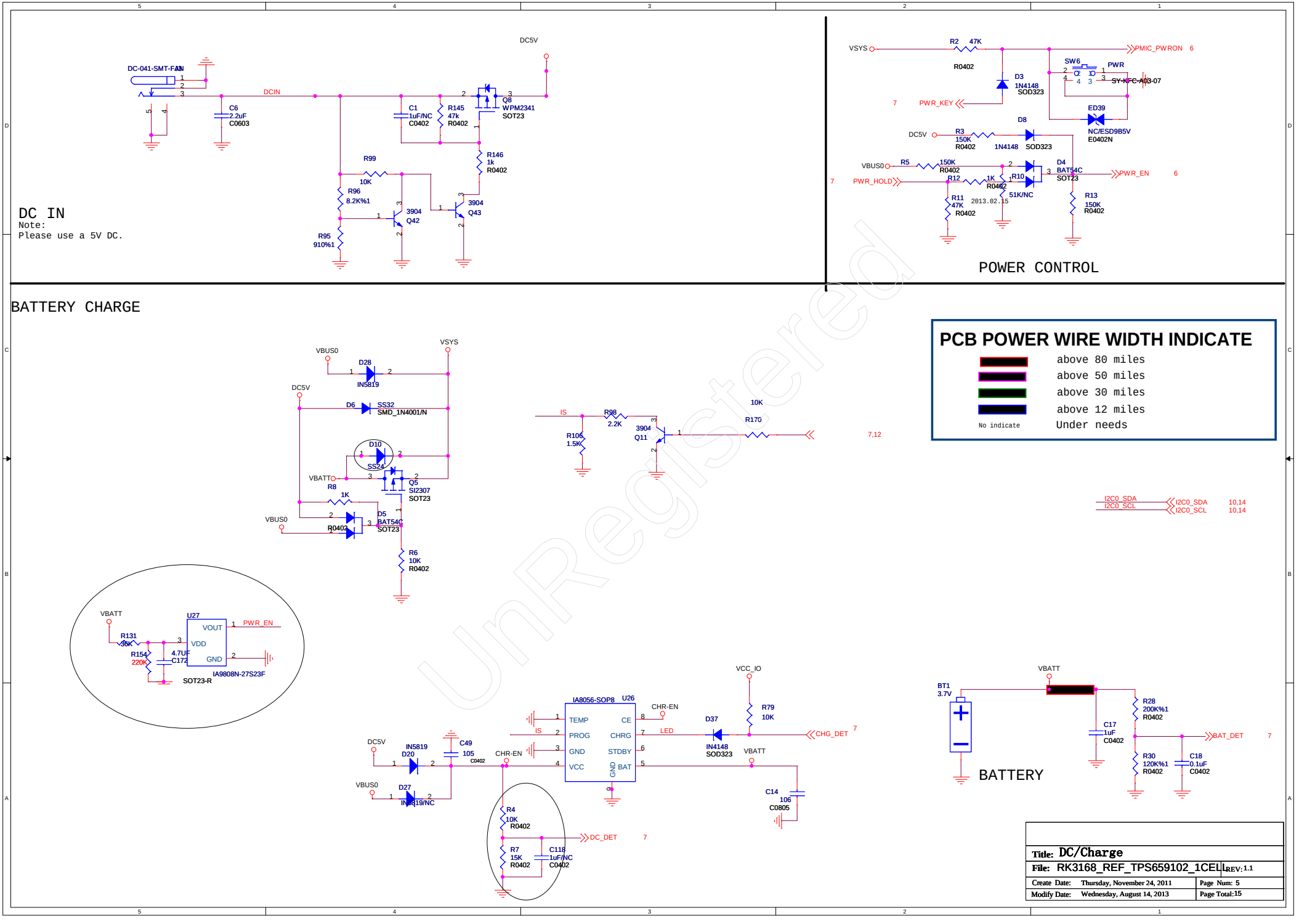

UnRegistered

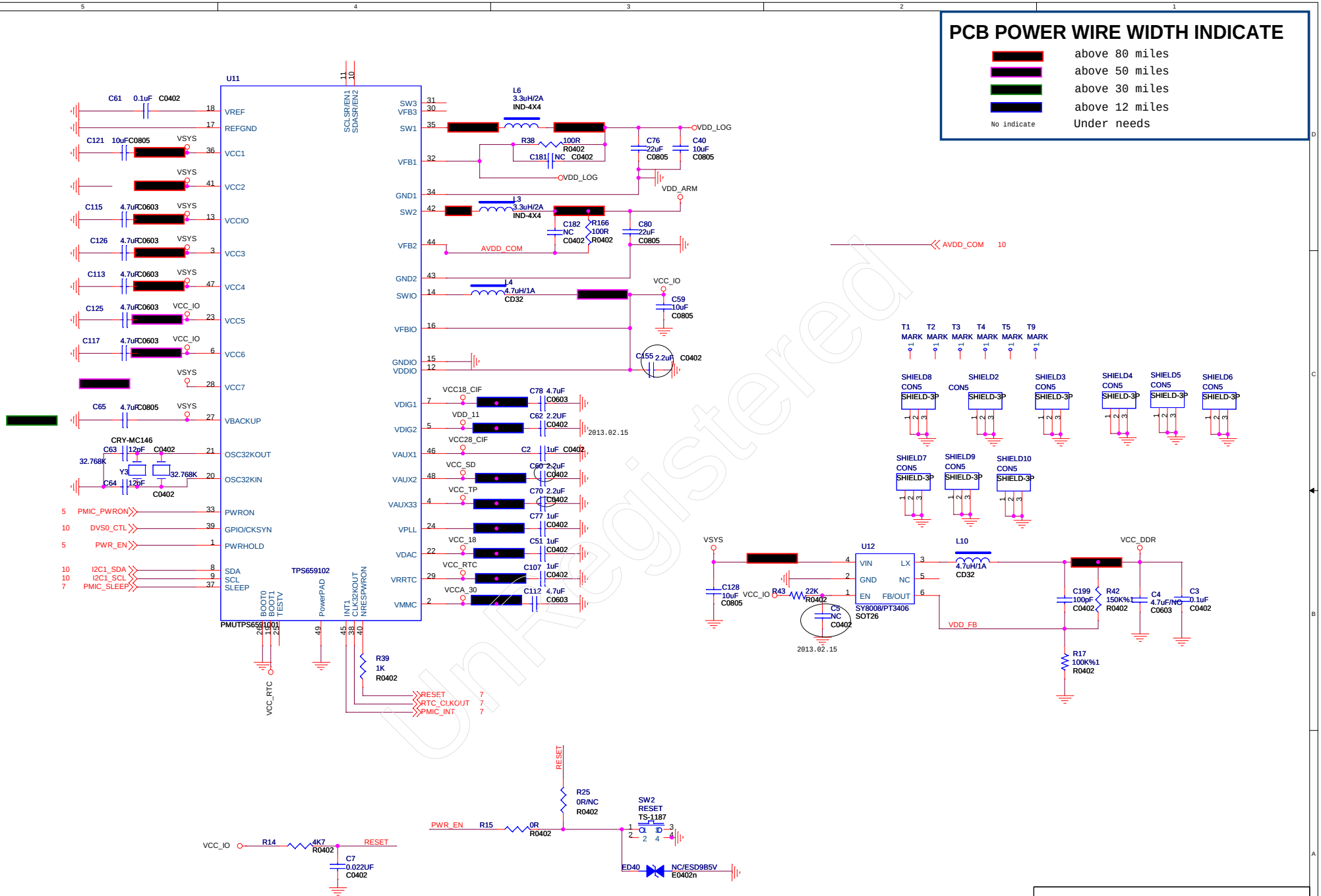

UnRegistered

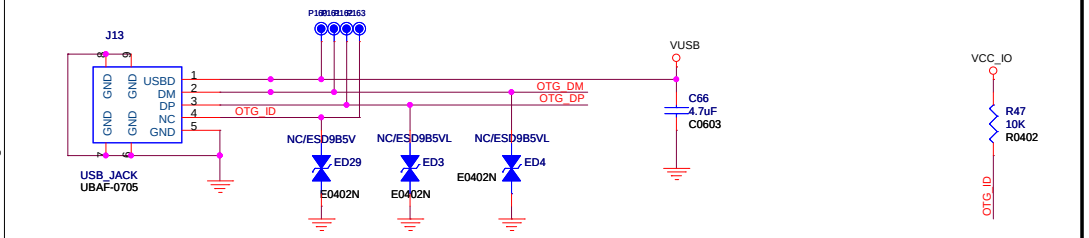

USB OTG CONNECTOR

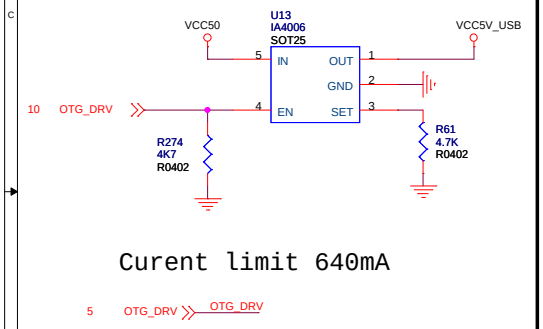

Curent limit 640mA

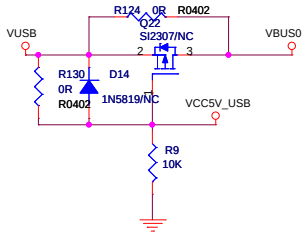

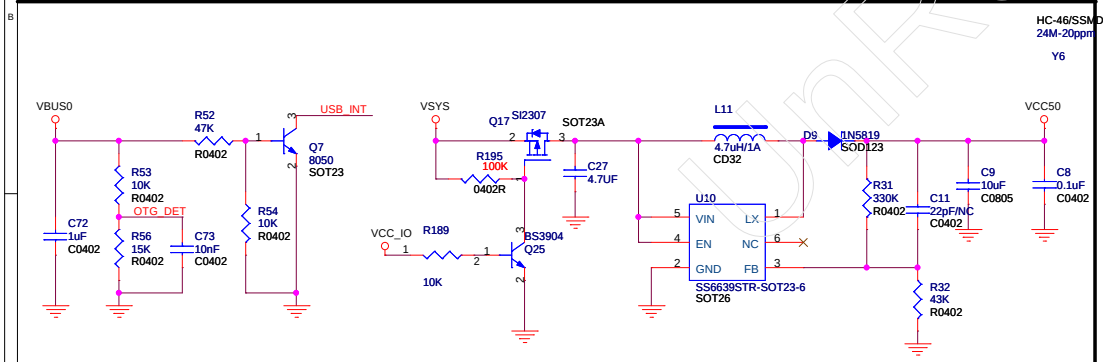

USB_DET

USB HOST POWER

Curent limit Imin=750mA

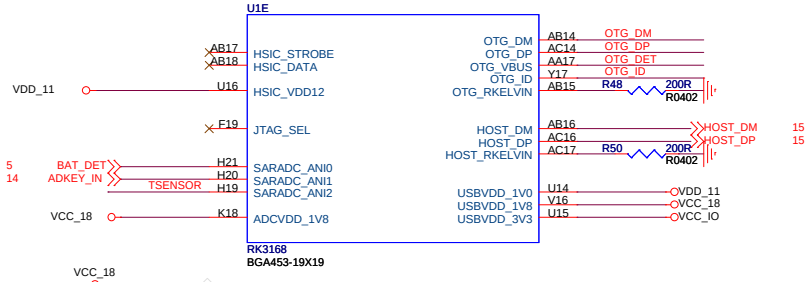

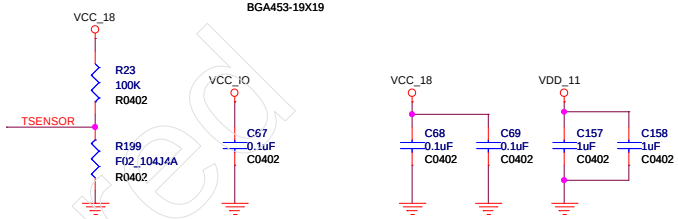

RK3168_E

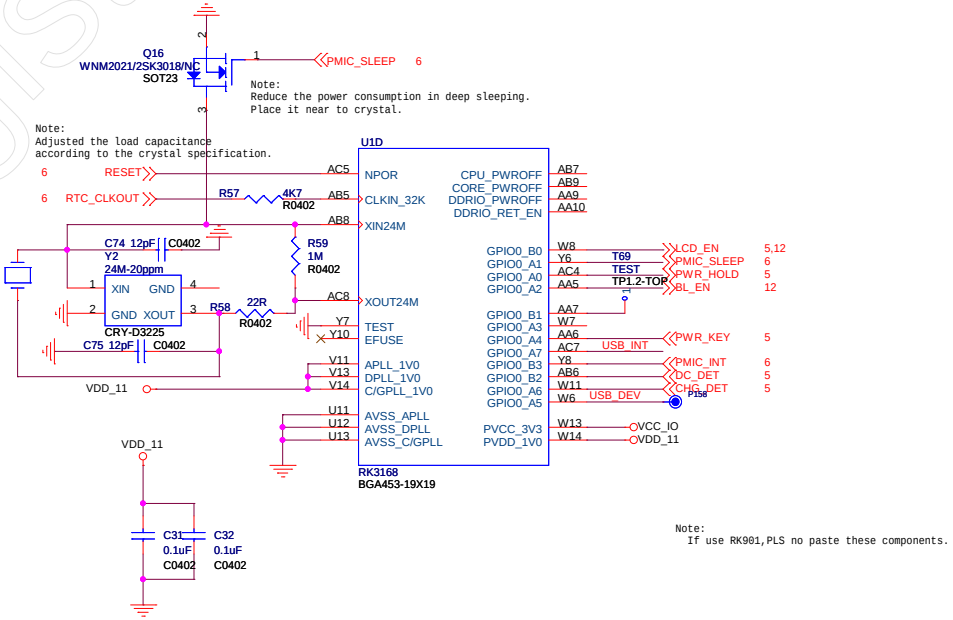

RK3168_D

Title: USB OTG/VIB	
File: RK3168_REF_TPS659102_1CELL	REV: 1.1
Create Date: Tuesday, November 29, 2011	Page Num: 7
Modify Date: Tuesday, August 06, 2013	Page Total: 15

UnRegistered

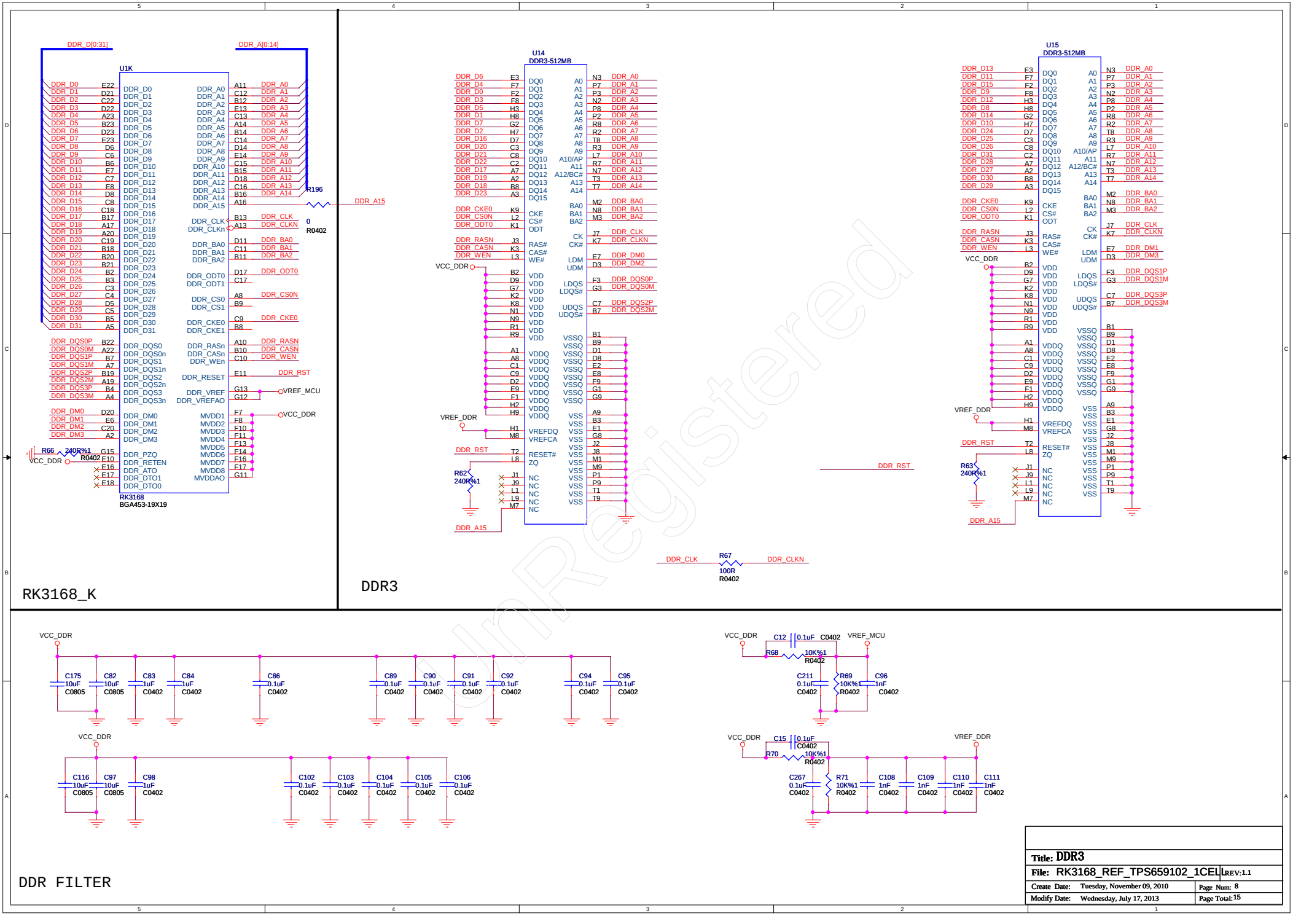

UnRegistered

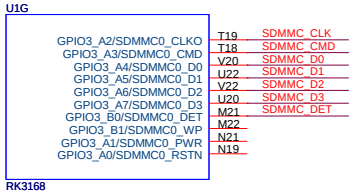

RK3168_G

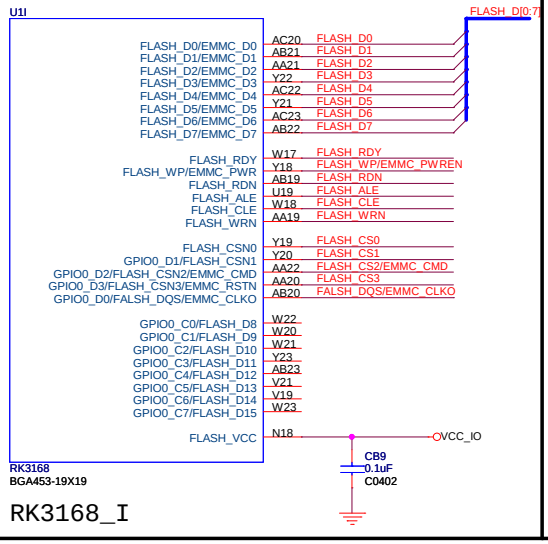

RK3168_I

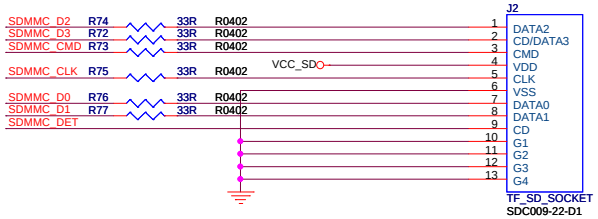

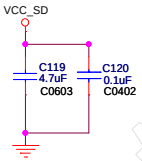

TF CARD

INAND(OPTION3)

LGA NANDFLASH(OPTION2)

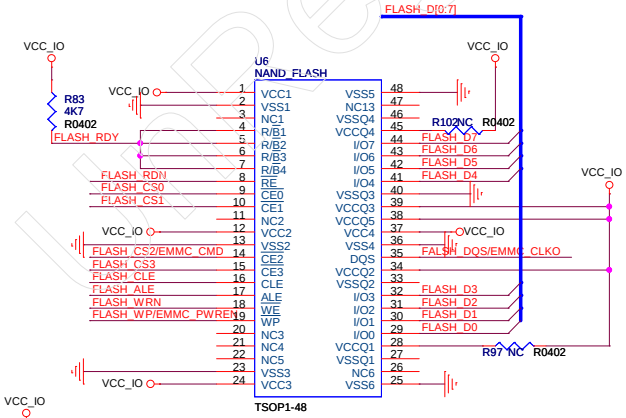

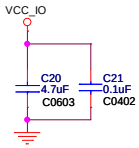

Note:
Reserve a PAD.

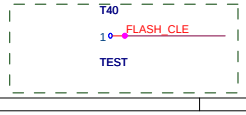

NAND FLASH(OPTION1)

Title: Flash/TF card	
File: RK3168_REF_TPS659102_1CELL	REV: 1.1
Create Date: Thursday, October 14, 2010	Page Num: 9
Modify Date: Thursday, July 18, 2013	Page Total: 15

Unregistered

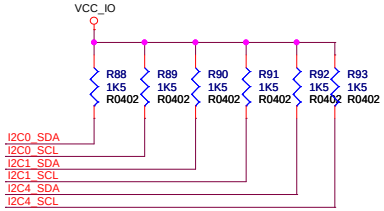

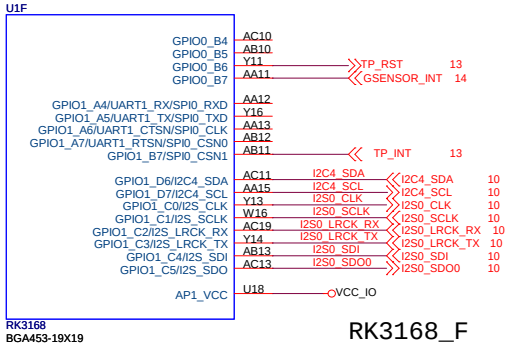

RK3168_F

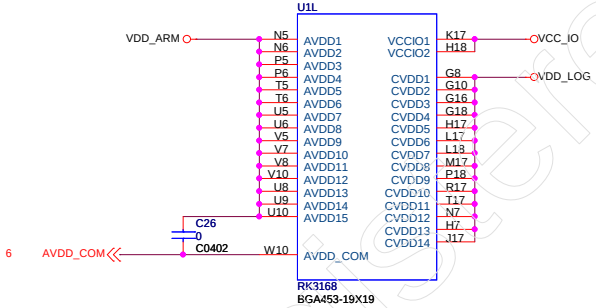

RK3168_L

Note:
Place these filter capacitors under CPU.

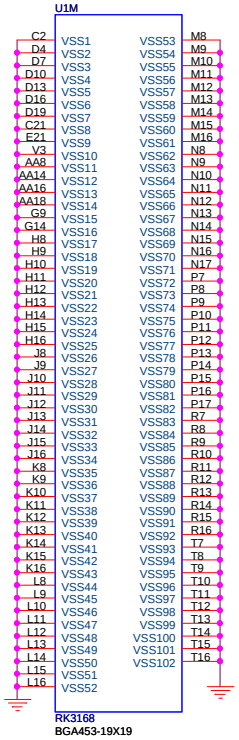

RK3168_M

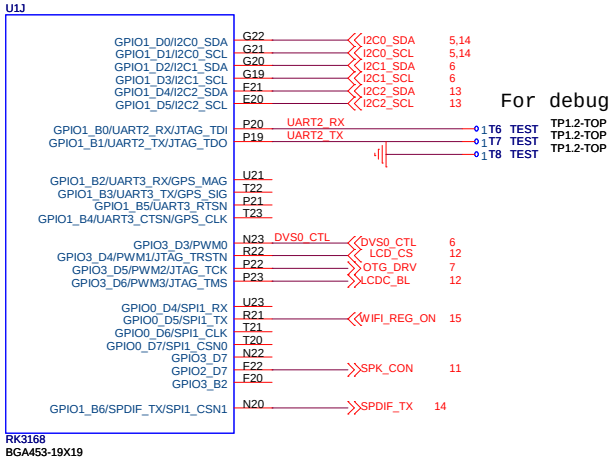

For debug

RK3168_J

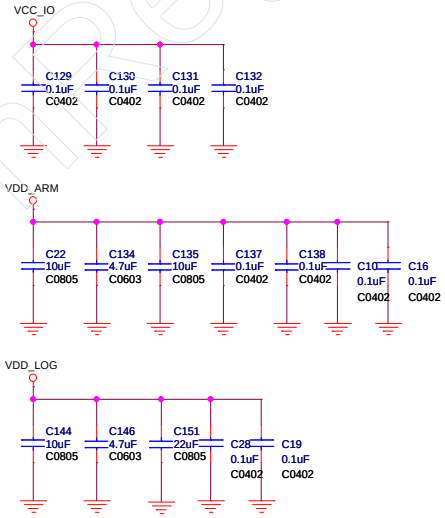

RK3188 CORE POWER FILTER

Title: GPIO	
File: RK3168_REF_TPS659102_1CELL	REV: 1.1
Create Date: Monday, October 18, 2010	Page Num: 10
Modify Date: Tuesday, August 06, 2013	Page Total: 15

Unregistered

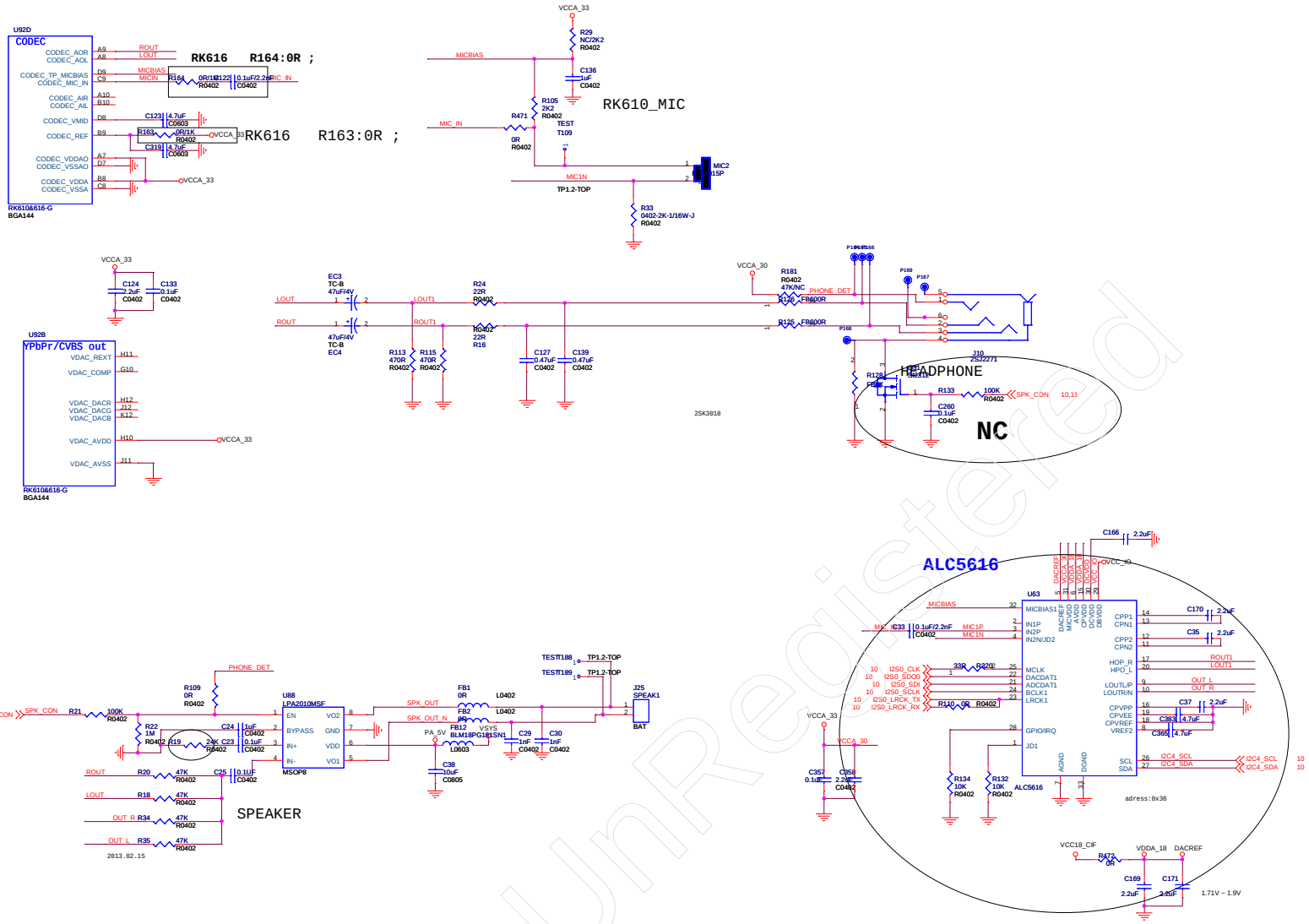

UnRegistered

Title: Audio	
File: RK3168_REF_TPS659102_1CELL	REV: 1.1
Create Date: Friday, October 15, 2010	Page Num: 11
Modify Date: Friday, July 26, 2013	Page Total: 15

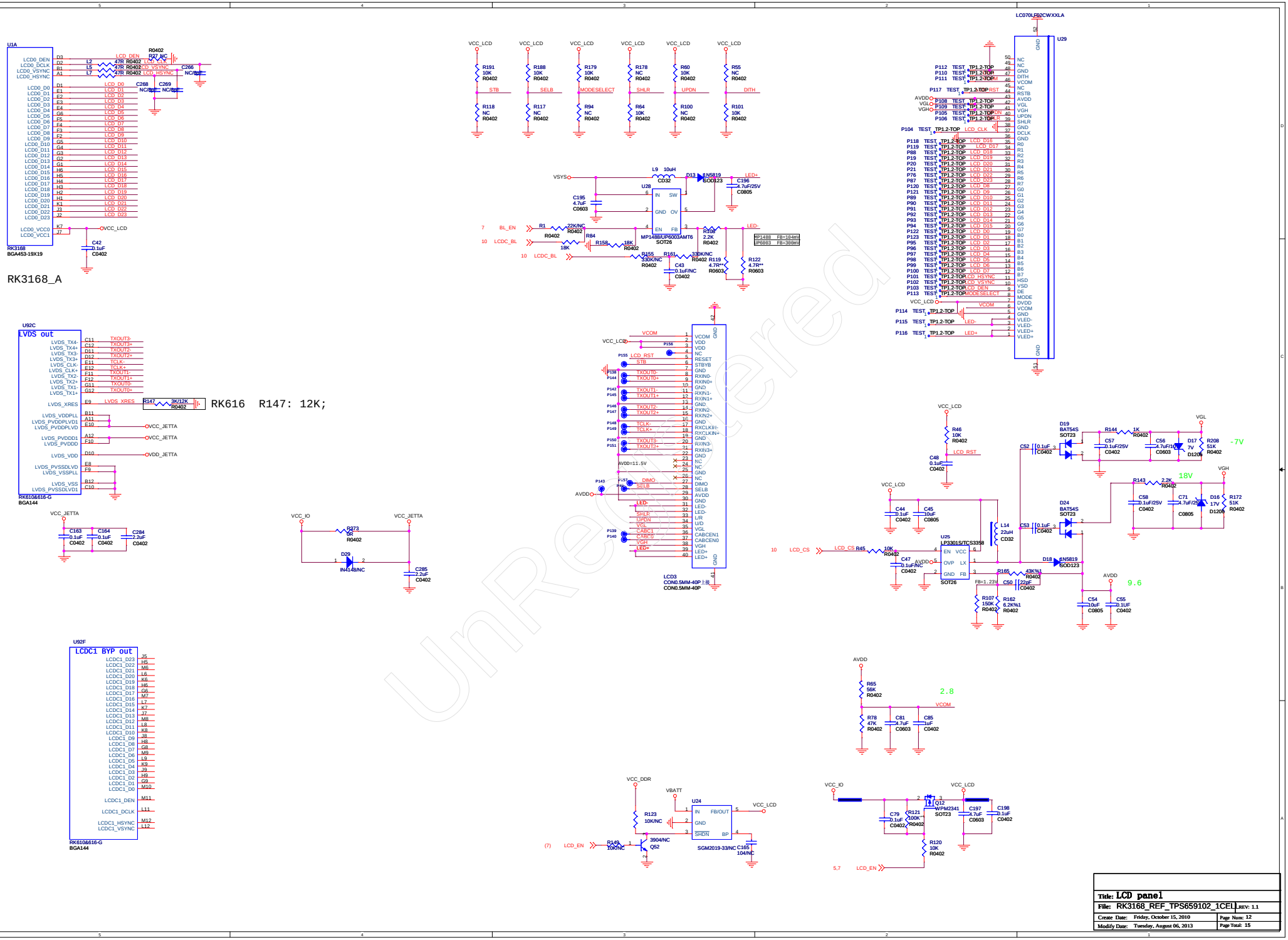

UnRegistered

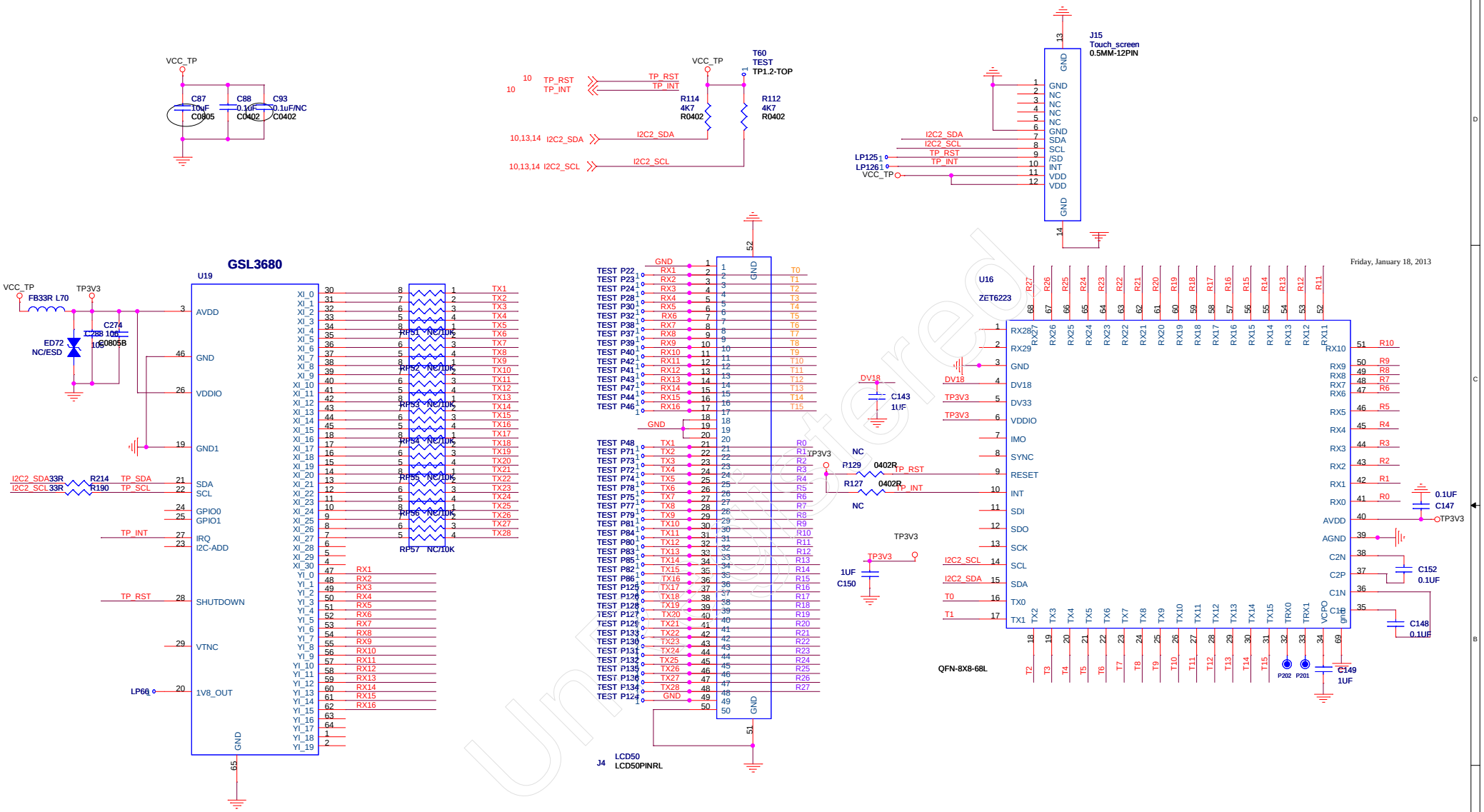

Friday, January 18, 2013

Title: Touch panel	
File: RK3168_REF_TPS659102_1CELL	REV: 1.1
Create Date: Thursday, December 08, 2011	Page Num: 13
Modify Date: Thursday, July 25, 2013	Page Total: 15

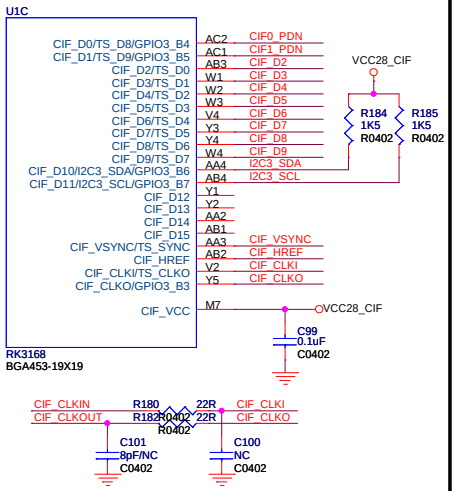

RK3168_C

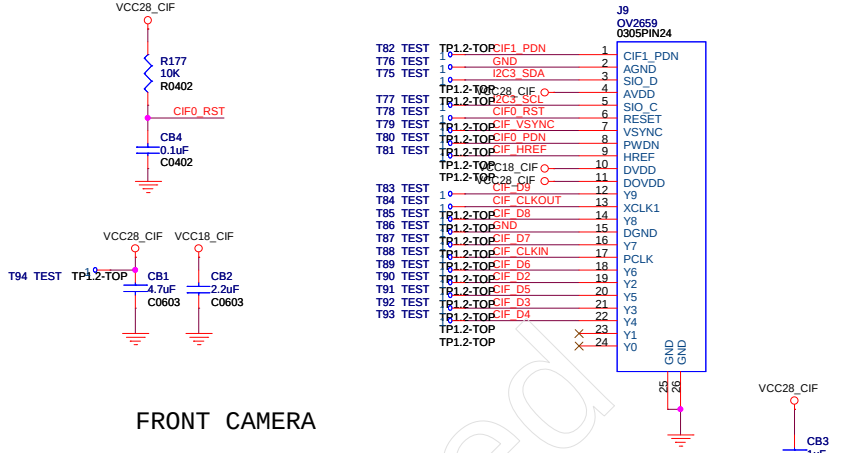

FRONT CAMERA

Note: If using other sensor modules,
follow to the requirements of SPEC on the power supply.

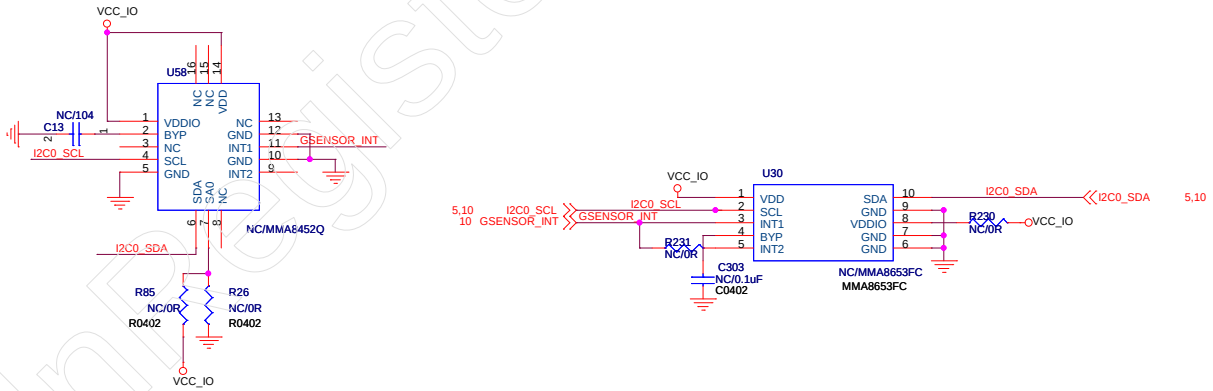

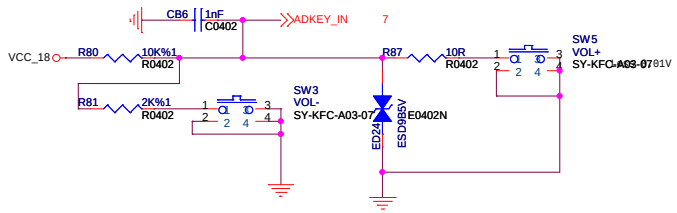

KEY BAORD

When the system power on, the Adkey_in level is 0V, RK31 enter into recovery mode.

Title: Camera/G_Sensor/Key/COMP/IR	
File: RK3168_REF_TPS659102_1CELL	REV: 1.1
Create Date: Friday, October 15, 2010	Page Num: 14
Modify Date: Friday, July 26, 2013	Page Total: 15

Unregistered

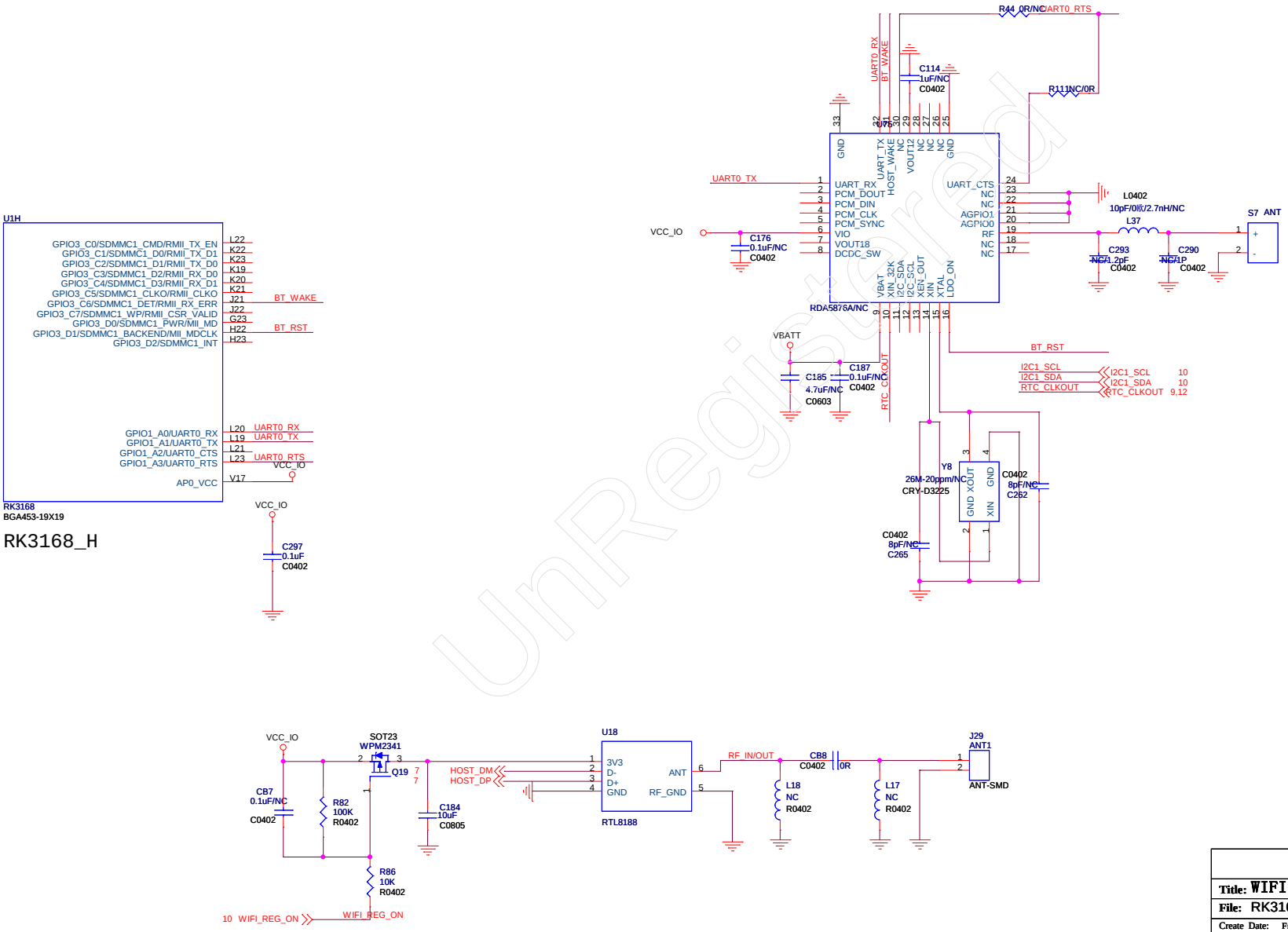

Title: WIFI	
File: RK3168_REF_TPS659102_1CEL	REV: 1.1
Create Date: Friday, October 15, 2010	Page Num: 15
Modify Date: Monday, July 15, 2013	Page Total: 15

UnRegistered

UD88E00-1V0	initial	20120117
	delet R3,R10,R11,R32,R40	20120210
	add C70,C71	
UD88E00-1V1	update ANT matching value , L5, C13	20120326

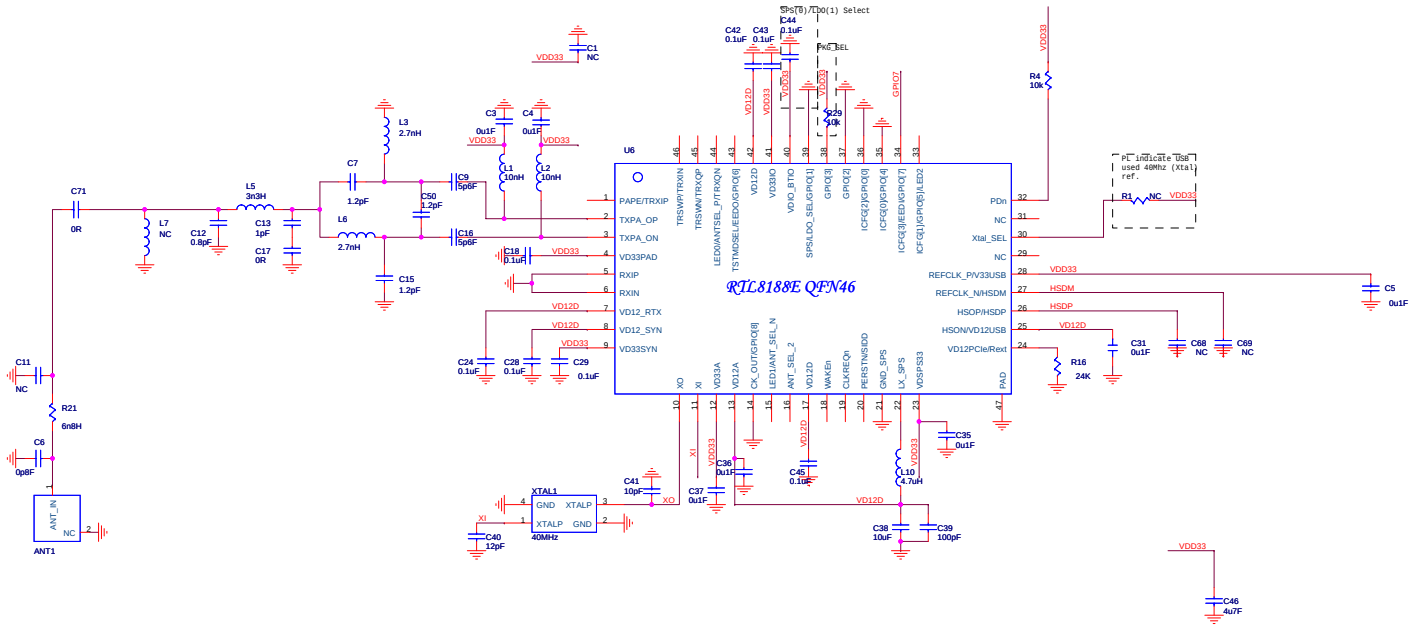

Title	UD88E00-1V0		
Size Custom	Document Number <Doc>		Rev 1V0
Date: Thursday, April 05, 2012	Sheet 1 of 1		