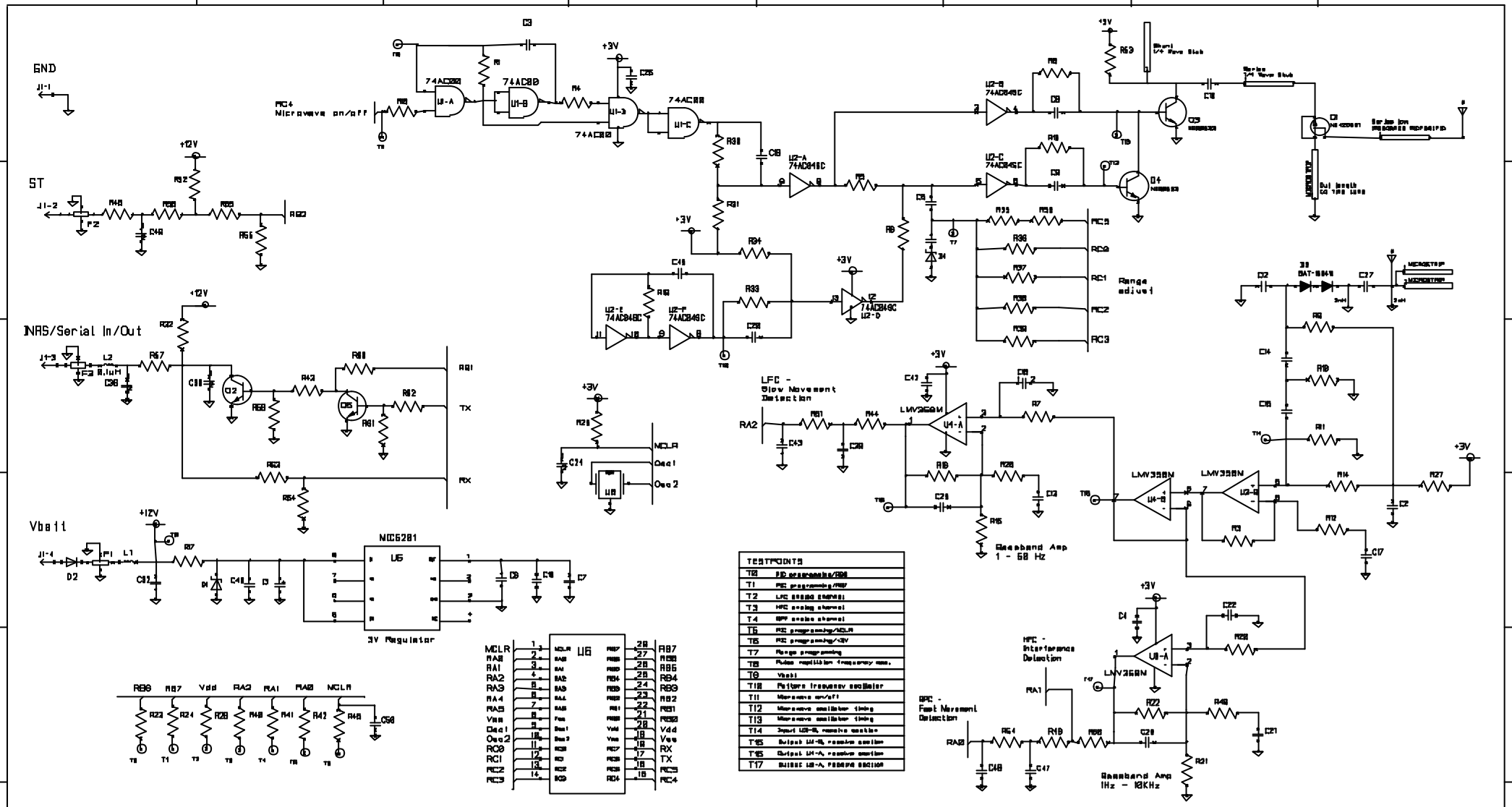
GND
ST
INAS/Serial In/Out
Vbatt
Microwave on/off
Range adjust
LFC - Slow Movement Detection
Baseband Amp 1 - 50 Hz
HFC - Interference Detection
BFC - Fast Movement Detection
Baseband Amp 1Hz - 10KHz
3V Regulator
MCLR
Osc1
Osc2
RX
TX
TESTPOINTS
CEL
Connaught Electronics Ltd.
Designed by Derek Savage
Drawn by Derek Savage
Checked by
File name
Date 12/09/02
Scale
Edition
Sheet
Revision note
Date
Signature
Checked
Updating RC filters on LF and BPF channels and changing R5 to 680 ohm
Updating changes required for BNW Z4