Display Format (for each existing Neighbor BS in each of the existing BSs if requested for all)	BSIDLSB :<value> NeighborBSIDLSB :<value> SynchronizationIndicator :<value> EIRP :<value> Bandwidth(MHz) :<value> UplinkFeedbackZonePermutationBase :<value> PreambleIndex :<value> UCDConfigurationChangeCount :<value> DCDConfigurationChangeCount :<value> IsotropicrecpwrforInitrang :<value> CenterFrequency(MHz) :<value> PagingGroupId :<value> neighborStartRangeCodes :<value> NeighborBsDlDataMIMOMode :<value>
Command Modes	Global command mode

3.9.9.7.2 Displaying Configuration Information for Neighbor BS Required C/N Level Parameters

To display configuration for the Neighbor BS Required C/N Level parameters, run the following command:

npu# show nbr-requiredcnr bs [<(1 to 16777215 StepSize 1)> bs-id-lsb <(1 to 16777215 StepSize 1)>]

Specify the BS ID and the Neighbor BS ID (bs-id-lsb) if you want to display configuration for a particular Neighbor BS in a particular BS. For example, to display the Required C/N Level parameters of Neighbor BS 68000 in BS 66503, run the following command:

npu# show nbr-requiredcnr bs 66053 bs-id-lsb 68000

Do not specify these parameters if you want to view configuration information for all existing Neighbor BSs in all existing BSs. To display information for all Neighbor BSs in all BSs, run the following command:

npu# show nbr-requiredcnr bs

Command Syntax

npu# show nbr-requiredcnr bs [<(1 to 16777215 StepSize 1)> bs-id-lsb <(1 to 16777215 StepSize 1)>]

Privilege Level

1

Syntax Description

Parameter	Description	Presence	Default Value	Possible Values
<(1 to 16777215 StepSize 1)>	The BS ID Specify a value for this parameter if you want to display the Required C/N Level parameters of a specific Neighbor BS in a specific BS. Do not specify a value for this parameter if you want to display the Required C/N Level parameters of all Neighbor BSs in all BSs.	Optional	N/A	1-16777215
bs-id-lsb <(1 to 16777215 StepSize 1)>	The Neighbor BS ID. Specify a value for this parameter if you want to display the Required C/N Level parameters of a specific Neighbor BS in a specific BS. Do not specify a value for this parameter if you want to display the Required C/N Level parameters of all Neighbor BSs in all BSs.	Optional	N/A	1-16777215

Display Format (for each existing Neighbor BS in each of the existing BSs if requested for all)	BSIDLSB	:<value>
	NeighborBSIDLSB	:<value>
	RequiredCNRforACK	:<value>
	RequiredCNRforCQI	:<value>
	RequiredCNRforCDMA	:<value>
	RequiredCNRforQPSK1/2	:<value>
	RequiredCNRforQPSK3/4	:<value>
	RequiredCNRfor16QAM1/2	:<value>
	RequiredCNRfor16QAM3/4	:<value>
	RequiredCNRfor64QAM1/2	:<value>
	RequiredCNRfor64QAM2/3	:<value>
	RequiredCNRfor64QAM3/4	:<value>
	RequiredCNRfor64QAM5/6	:<value>
Command Modes	Global command mode	

3.9.9.7.3 Displaying Configuration Information for Neighbor BS Triggers Parameters

To display configuration information for Neighbor BS Triggers parameters, run the following command:

npu# show nbr-triggers bs [<(1 to 16777215 StepSize 1)> bs-id-lsb <(1 to 16777215 StepSize 1)> TrigName {scnReqCinrMin | scnReqRssiMin | scnReqRtdMax | scnRepCinrMaxNbs | scnRepRssiMaxNbs | scnRepCinrMargin | scnRepRssiMargin | scnRepRtdMax | scnRepCinrMinSbs | scnRepRssiMinSbs | hoReqCinrMaxNbs | hoReqRssiMaxNbs | hoReqCinrMargin | hoReqRssiMargin | hoReqRtdMax | hoReqCinrMinSbs | hoReqRssiMinSbs}]

Specify the BS ID, Neighbor BS ID (bs-id-lsb) and Trigger name if you want to display configuration for a particular Trigger. For example, to display the scnReqCinrMin parameters of BS Neighbor 68000 in BS 66053, run the following command:

npu# show nbr-triggers bs 66053 bs-id-lsb 68000 TrigName scnReqCinrMin

Do not specify these parameters if you want to view configuration information for all existing Neighbor BSs in all BSs. To display information for all Neighbor BSs in all BSs, run the following command:

npu# show nbr-triggers bs

Command Syntax

npu# show nbr-triggers bs [<(1 to 16777215 StepSize 1)> bs-id-lsb <(1 to 16777215 StepSize 1)> TrigName {scnReqCinrMin | scnReqRssiMin | scnReqRtdMax | hoReqCinrMaxNbs | hoReqRssiMaxNbs | hoReqCinrMargin | hoReqRssiMargin | hoReqRtdMax | hoReqCinrMinSbs | hoReqRssiMinSbs}]

Privilege Level

1

Syntax Description

Parameter	Description	Presence	Default Value	Possible Values
<(1 to 16777215 StepSize 1)>	The BS ID Specify a value for this parameter if you want to display a specific Trigger in a specific Neighbor BS of a specific BS. Do not specify a value for this parameter if you want to display the Triggers of all Neighbor BSs in all BSs.	Optional	N/A	1-16777215
bs-id-lsb <(1 to 16777215 StepSize 1)>	The Neighbor BS ID. Specify a value for this parameter if you want to display a specific Trigger in a specific Neighbor BS of a specific BS. Do not specify a value for this parameter if you want to display the Triggers of all Neighbor BSs in all BSs.	Optional	N/A	1-16777215

	TrigName {scnReqCinrMin | scnReqRssiMin | scnReqRtdMax | hoReqCinrMaxNbs | hoReqRssiMaxNbs | hoReqCinrMargin | hoReqRssiMargin | hoReqRtdMax | hoReqCinrMinSbs | hoReqRssiMinSbs}]	The Trigger name Specify only if you want to display a specific Trigger of a specific Neighbor BS in a specific BS. Do not specify if you want to display all Triggers parameters of all Neighbor BSs in all BSs			■ scnReqCinrMin ■ scnReqRssiMin ■ scnReqRtdMax ■ hoReqCinrMaxNbs ■ hoReqRssiMaxNbs ■ hoReqCinrMargin ■ hoReqRssiMargin ■ hoReqRtdMax ■ hoReqCinrMinSbs ■ hoReqRssiMinSbs}

Display Format (for a selected Trigger)	BSIDLSB	:<value>
	BSIDLSB	:value>
	scnReqCinrMin	:value>

Command Modes	Global command mode

3.9.9.7.4 Displaying Configuration Information for Neighbor BS Specific BS Triggers Parameters

To display configuration information for Neighbor BS Specific BS Triggers parameters, run the following command:

npu# show nbr-specific bs [<(1 to 16777215 StepSize 1)> bs-id-lsb <(1 to 16777215 StepSize 1)> TrigName {hoReqCinrMaxNbs | hoReqRssiMaxNbs | hoReqCinrMargin | hoReqRssiMargin}]

Specify the BS ID, Neighbor BS ID (bs-id-lsb) and Specific BS Trigger name if you want to display configuration for a particular Trigger. For example, to display the hoReqRssiMaxNbs parameters of BS Neighbor 68000 in BS 66053, run the following command:

npu# show nbr-specific bs 66053 bs-id-lsb 68000 TrigName hoReqRssiMaxNbs

Do not specify these parameters if you want to view configuration information for all existing Neighbor BSs in all BSs. To display information for all Neighbor BSs in all BSs, run the following command:

npu# show nbr-triggers bs

Command Syntax

npu# show nbr-specific bs [<(1 to 16777215 StepSize 1)> bs-id-lsb <(1 to 16777215 StepSize 1)> TrigName {hoReqCinrMaxNbs | hoReqRssiMaxNbs | hoReqCinrMargin | hoReqRssiMargin}]

Privilege Level

1

Syntax Description

Parameter	Description	Presence	Default Value	Possible Values
<(1 to 16777215 StepSize 1)>	The BS ID Specify a value for this parameter if you want to display a specific Specific BS Trigger in a specific Neighbor BS of a specific BS. Do not specify a value for this parameter if you want to display the Specific BS Triggers of all Neighbor BSs in all BSs.	Optional	N/A	1-16777215

	bs-id-lsb <(1 to 16777215 StepSize 1)>	The Neighbor BS ID. Specify a value for this parameter if you want to display a specific Specific BS Trigger in a specific Neighbor BS of a specific BS. Do not specify a value for this parameter if you want to display the Specific BS Triggers of all Neighbor BSs in all BSs.	Optional	N/A	1-16777215
	TrigName {hoReqCinrMaxNbs | hoReqRssiMaxNbs | hoReqCinrMargin | hoReqRssiMargin}]	The Trigger name Specify only if you want to display a specific Specific BS Trigger of a specific Neighbor BS in a specific BS. Do not specify if you want to display all Specific BS Triggers parameters of all Neighbor BSs in all BSs			■ {hoReqCinrMaxNbs ■ hoReqRssiMaxNbs ■ hoReqCinrMargin ■ hoReqRssiMargin}

Display Format (for a selected Trigger)	BSIDLSB :<value> BSIDLSB :value> hoReqRssiMaxNbs :value>
Command Modes	Global command mode

3.9.9.7.5 Displaying Configuration Information for All Neighbor BS Parameters

To display configuration for the all Neighbor BS parameters, run the following command:

npu# show nbr-all bs [<(1 to 16777215 StepSize 1)> bs-id-lsb <(1 to 16777215 StepSize 1)>]

Specify the BS ID and the Neighbor BS ID (bs-id-lsb) if you want to display configuration for a particular Neighbor BS in a particular BS. For example, to display all parameters of Neighbor BS 68000 in BS 66503, run the following command:

npu# show nbr-all bs 66053 bs-id-lsb 68000

Do not specify these parameters if you want to view configuration information for all existing Neighbor BSs in all existing BSs. To display information for all Neighbor BSs in all BSs, run the following command:

npu# show nbr-all bs

Command Syntax

npu# show nbr-all bs [<(1 to 16777215 StepSize 1)> bs-id-lsb <(1 to 16777215 StepSize 1)>]

Privilege Level

10

Syntax Description

Parameter	Description	Presence	Default Value	Possible Values
<(1 to 16777215 StepSize 1)>	The BS ID Specify a value for this parameter if you want to display the parameters of a specific Neighbor BS in a specific BS. Do not specify a value for this parameter if you want to display the parameters of all Neighbor BSs in all BSs.	Optional	N/A	1-16777215
bs-id-lsb <(1 to 16777215 StepSize 1)>	The Neighbor BS ID. Specify a value for this parameter if you want to display the parameters of a specific Neighbor BS in a specific BS. Do not specify a value for this parameter if you want to display the parameters of all Neighbor BSs in all BSs.	Optional	N/A	1-16777215

Command Modes: Global command mode

3.9.10 Managing the RF Frequency Parameter

After enabling the BS configuration mode, you can configure the RF frequency parameter (refer to Section 3.9.10.1).

You can display configuration information for the RF frequency parameter of a selected or all existing BSs (refer to Section 3.9.10.2).

3.9.10.1 Configuring the RF Frequency Parameter

To configure the RF frequency parameter:

From the BS configuration mode, run the following command:

npu(config-bs-66053)# rf [frequency <(2022.5 to 2217.5 StepSize 0.125) | (2302.5 to 2397.5 StepSize 0.125) | (2487.5 to 2687.5 StepSize 0.125) | (3302.5 to 3397.5 StepSize 0.125) | (3402.5 to 3597.5 StepSize 0.125) | (3602.5 to 3797.5 StepSize 0.125)>]

Command Syntax:

```
npu(config-bs-66053)# rf [frequency <((2022.5 to 2217.5 StepSize
0.125) | (2302.5 to 2397.5 StepSize 0.125) | (2487.5 to 2687.5
StepSize 0.125) | (3302.5 to 3397.5 StepSize 0.125) | (3402.5 to
3597.5 StepSize 0.125) | (3602.5 to 3797.5 StepSize 0.125)>]
```

Privilege Level: 10

Syntax Description:

Parameter	Description	Presence	Default Value	Possible Values

	[frequency <(2022.5 to 2217.5 StepSize 0.125) | (2302.5 to 2397.5 StepSize 0.125) | (2487.5 to 2687.5 StepSize 0.125) | (3302.5 to 3397.5 StepSize 0.125) | (3402.5 to 3597.5 StepSize 0.125) | (3602.5 to 3797.5 StepSize 0.125)>]	The center of the frequency band in which the BS will transmit, in MHz. Must be within the valid range of the relevant ODU. The indicated Possible Values are for a bandwidth of fiveMhz. For a different bandwidth, the actually valid values are from f1+1/2BW to f2-1/2BW, where f1 is the lowest frequency of the ODU's radio band. Note that oDU23052360000N361by1Y0 (16) includes two bands: 2305-2320, 2345-2360 MHz.), f2 is the highest frequency of the ODU's band, and BW is the configured bandwidth (see "Configuring the Baseband Bandwidth Parameter" on page 559).	Mandatory	N/A	■ 2022.5 to 2217.5 in steps of 0.125 ■ 2302.5 to 2397.5 in steps of 0.125 ■ 2487.5 to 2687.5 in steps of 0.125 ■ 3302.5 to 3397.5 in steps of 0.125 ■ 3402.5 to 3597.5 in steps of 0.125 ■ 3602.5 to 3797.5 in steps of 0.125

Command Modes	bs configuration mode

IMPORTANT

When creating a new BS, the mandatory frequency parameter must be configured.

3.9.10.2 Displaying Configuration Information for the RF Frequency Parameter

To display configuration information of the RF frequency parameter, run the following command:

npu# show rf bs [<(1 to 16777215 StepSize 1)

Specify the BS ID if you want to display information for a particular BS. For example, to display the RF frequency of BS 66053, run the following command:

npu# show rf bs 66053

Do not specify this parameter if you want to view information for all existing BSs. To display information for all BSs, run the following command:

npu# show rf bs

Command Syntax

npu# show rf bs [<(1 to 16777215 StepSize 1)

Privilege Level

1

Syntax Description

Parameter	Description	Presence	Default Value	Possible Values
<(1 to 16777215 StepSize 1)>	The BS ID Specify a value for this parameter if you want to display the RF frequency parameter of a specific BS. Do not specify a value for this parameter if you want to display the RF frequency parameter of all BSs.	Optional	N/A	1-16777215

Display Format

(for each existing BS if requested for all BSs)

BSIDLSB :<value>

Frequency :<value>

Command Modes

Global command mode

3.9.11 Managing the Baseband Bandwidth Parameter

After enabling the BS configuration mode, you can configure the Baseband bandwidth parameter (refer to Section 3.9.11.1).

You can display configuration information for the Baseband bandwidth parameter of a selected or all existing BSs (refer to Section 3.9.11.2).

3.9.11.1 Configuring the Baseband Bandwidth Parameter

To configure the Baseband bandwidth parameter:

From the BS configuration mode, run the following command:

npu(config-bs-66053)# baseband [bandwidth {fiveMHz | tenMHz | sevenMHz}]

IMPORTANT

A bandwidth of 7 MHz (sevenMHz) is not applicable for ODUs in the 2.x GHz band.

Command Syntax

npu(config-bs-66053)# baseband `[bandwidth {fiveMHz | tenMHz | sevenMHz} ]`

Privilege Level

10

Syntax Description

Parameter	Description	Presence	Default Value	Possible Values
[bandwidth {fiveMHz | tenMHz | sevenMHz}]	BS channel bandwidth	Mandatory	N/A	■ fiveMHz ■ tenMHz ■ sevenMHz

Command Modes

bs configuration mode

IMPORTANT

When creating a new BS, the mandatory frequency parameter must be configured.

Note that the valid value ranges (and in some cases also default value) of certain parameters are affected by the value configured for the bandwidth parameter. If you change the bandwidth, verify that these parameters are configured properly:

Table	Parameters
RF (see Section 3.9.10.1)	frequency

Airframe Structure, General (see Section 3.9.12.2.1)	ul-dl-allocation
Airframe Structure, Map Zone (see Section 3.9.12.2.2)	majorgrps
Airframe Structure, Uplink Data Zone (see Section 3.9.12.2.6)	subchannels
Triggers (see Section 3.9.7.1)	triggers-scnreq-rtd-max triggers-horeq-rtd-max

3.9.11.2 Displaying Configuration Information for the Baseband Bandwidth Parameter

To display configuration information of the Baseband bandwidth parameter, run the following command:

npu# show baseband bs [<(1 to 16777215 StepSize 1)

Specify the BS ID if you want to display information for a particular BS. For example, to display the Baseband bandwidth of BS 66053, run the following command:

npu# show baseband bs 66053

Do not specify this parameter if you want to view information for all existing BSs. To display information for all BSs, run the following command:

npu# show baseband bs

Command Syntax	**npu# show baseband bs** [<(1 to 16777215 StepSize 1)
Privilege Level	1

Syntax Description

Parameter	Description	Presence	Default Value	Possible Values
<(1 to 16777215 StepSize 1)>	The BS ID Specify a value for this parameter if you want to display the Baseband bandwidth parameter of a specific BS. Do not specify a value for this parameter if you want to display the Baseband bandwidth parameter of all BSs.	Optional	N/A	1-16777215

Display Format

(for each existing BS if requested for all BSs)

BSIDLSB :<value>

Bandwidth :<value>

Command Modes

Global command mode

3.9.12 Managing Airframe Structure Parameters

To configure Airframe Structure parameters:

1. Enable the Airframe configuration mode (refer to Section 3.9.12.1)
2. You can now execute any of the following tasks:
   - Configure one or more of the Airframe parameters tables (refer to Section 3.9.12.2)
   - Restore the default values of parameters in one or more of the Airframe parameters tables (refer to Section 3.9.12.3)
   - Terminate the Airframe configuration mode (refer to Section 3.9.12.4)

In addition, you can, at any time, display configuration information for each of the Airframe parameters tables (refer to Section 3.9.12.5).

3.9.12.1 Enabling the Airframe Configuration Mode

To configure the Airframe parameters, first enable the Airframe configuration mode. Run the following command to enable the Airframe configuration mode.

`npu(config-bs-66053)# airframe`

After enabling the Airframe configuration mode, you can execute any of the following tasks:

- Configure one or more of the Airframe parameters tables (refer to Section 3.9.12.2)
- Restore the default values of parameters in one or more of the Airframe parameters tables (refer to Section 3.9.12.3)

After executing the above tasks, you can terminate the Airframe configuration mode (refer to Section 3.9.12.4) and return to the BS configuration mode.

Note that for properly completing the Airframe configuration the **apply** command must be executed prior to exiting the Airframe configuration mode.

Command Syntax	`npu(config-bs-66053)# airframe`
Privilege Level	10
Command Modes	bs configuration mode

3.9.12.2 Configuring Airframe Parameters

After enabling the Airframe configuration mode you can configure the following parameters tables:

- General (refer to Section 3.9.12.2.1)
- Map Zone (refer to Section 3.9.12.2.2)

- Downlink Diversity (refer to Section 3.9.12.2.3)
- Uplink Feedback Zone (refer to Section 3.9.12.2.4)
- Downlink Data Zone (refer to Section 3.9.12.2.5)
- Uplink Data Zone (refer to Section 3.9.12.2.6)
- Mimo (refer to Section 3.9.12.2.7)

IMPORTANT

After completing the Airframe configuration, do not forget to execute the apply command before exiting the Airframe configuration mode:

npu(config-bs-66053-airframe)# apply

3.9.12.2.1 Configuring Airframe General Parameters

To configure the Airframe General parameters, run the following command:

npu(config-bs-66053-airframe)# general [cell-id <(0 to 31 StepSize 1)>] [preamble-grp <(1 to 2 StepSize 1)>] [segment <(0 to 2 StepSize 1)>] [frame-offset <zero|random>] [ul-duration <(3 to 7 StepSize 1 | 10 to 10 StepSize1)>] [nbr-beam-forming {yes | no}]

Neighbor BS Beam Forming (nbr-beam-forming): Applicable only for unit operating in MIMO Matrix A or B mode. The beam forming mechanism is based on symmetry in performance between uplink and down link. To compensate for possible differences due to HW of the ODU, a special low-level calibration signal is transmitted periodically in each link. During the time this calibration signal is transmitted all other radio links of the same BS and all its neighbors should not transmit, to reduce potential interference. The Beam Forming mechanism ensures that all neighboring BSs operating in Beam Forming mode will enter into silent mode when necessary. A unit operating in Matrix A or B mode should enter into silent mode when necessary (based on frame number information) only if it has neigboring BSs operating in Beam Forming mode.

IMPORTANT

When creating a new BS, all mandatory Neighbor BS General parameters must be configured.

Command Syntax

```
npu(config-bs-66053-airframe)# general [cell-id <(0 to 31 StepSize 1)> ] [preamble-grp <(1 to 2 StepSize 1)>] [segment <(0 to 2 StepSize 1)> ] [frame-offset <zero|random)> ] [ul-duration <(3 to 7 StepSize 1 | 10 to 10 StepSize1)> ] [nbr-beam-forming {yes | no} ]
```

Privilege Level

10

Syntax Description

Parameter	Description	Presence	Default Value	Possible Values
[cell-id <(0 to 31 StepSize 1)>]	The Cell ID (IDCell) used for preamble selection.	Mandatory when creating a new BS.	N/A	0 - 31
[preamble-grp <(1 to 2 StepSize 1)>]	The preamble group. A value of 2 is available only for the following combinations of segment and cell-id values: segment=0, cell-id=0, 3, 6, 9, 12, 15. segment=1, cell-id=1, 4, 7, 10, 13, 16. segment=2, cell-id=2, 5, 8, 11, 14, 17.	Optional	1	1 - 2
[segment <(0 to 2 StepSize 1)>]	The segment (BS) number in a three sector BS (0-2). This number influences the preamble selection and the major group used for the FDC transmission.	Mandatory when creating a new BS.	N/A	0 - 2
[frame-offset <zero|random>]	Controls the offset applied between the internal frame count and the reported frame number. If random is selected, the AU will choose a random number between 0 to 15.	Mandatory when creating a new BS.	zero	■ zero (0) ■ random

[ul-duration <(3 to 7 StepSize 1 | 10 to 10 StepSize1)>]	The total duration of the uplink in a frame, in slots. (one slot equals 3 symbols). The range is 4-7 or 10 for bandwidth = 5 or 10MHz, 3-5 or 7 for bandwidth = 7MHz. To avoid BS-BS interference, the ul-duration must be identical in all BSs in a geographical region.	Mandatory when creating a new BS.	N/A	3 - 7, 10
[nbr-beam-forming {yes | no}]	Applicable only for BSs using MIMO MatrixAorB mode. Indicates whether any of the neighboring BSs operates in beamForming mode.	Optional	no	■ yes ■ no

Command Modes: bs airframe configuration mode

3.9.12.2.2 Configuring Airframe Map Zone Parameters

To configure the Airframe Map Zone parameters, run the following command:

npu(config-bs-66053-airframe)# mapzone [size <(-1 to -1 StepSize 1) | (2 to 16 StepSize 2)>] [majorgrps <hex-string>] [repetition <(1 to 1 StepSize 1) | (2 to 6 StepSize 2)>] [RCID-Usage {enable | disable}]

Each transmitted MAP includes allocations for each MS it served, using the MS's CID for identifying each MS. The original CID includes 16 bits, which is significantly more than practically needed since a maximum of 500 MSs can be served by each BS. To reduce overhead, a smaller number of bits can be used, based on RCID (Reduced CID) defined in the standard. This mechanism can be used only if all MSs served by the BS support RCID. When enabled, CIDs of either 7 or 11 bits will be dynamically used, according to the current number of MS served at each given moment.

IMPORTANT

When creating a new BS, the mandatory Airframe Map Zone majorgrps parameter must be configured.

Command Syntax

npu(config-bs-66053-airframe)# mapzone `[size <(-1 to -1 StepSize 1) | (2 to 16 StepSize 2)> ] [majorgrps <hex-string>] [repetition <(1 to 1 StepSize 1) | (2 to 6 StepSize 2)> ] [RCID-Usage {enable | disable} ]`

Privilege Level

10

Syntax Description

Parameter	Description	Presence	Default Value	Possible Values
size <(-1 to -1 StepSize 1) | (2 to 16 StepSize 2)>	The map zone size in symbols. A value of "-1" means the map zone size will be dynamic.	Optional	6	-1, 2, 4, 6, 8, 10, 12, 14, 16.

	majorgrps <hex-string>	The Major groups allocated to the BS for maps transmission. Two hexadecimal numbers representing 8 bits numbered 0 to 7 (left to right). Bits 0 to 5 indicate whether Subchannel Groups 0 to 5 (respectively) are allocated. Bit 6 and 7 are set to 0. If BW=5 MHz, bits 1, 3 and 5 are not relevant ("don't care"). The value must be set to A8. For BW=7/10 MHz with Reuse 1, bits 0 to 5 must be set. The value must be set to fc. For BW=7/10 MHz with Reuse 3: If segment (see Section 3.9.12.2.1) = 0, then bits #0 and 1 should be set. The value must be set to c0. If segment = 1, then bits #2 and 3 should be set. The value must be set to 30. If segment = 2, then bits #4 and 5 should be set. The value must be set to 0c.	Mandatory when creating a new BS.	N/A	a string of two hexadecimal numbers.
	repetition <(1 to 1 StepSize 1) | (2 to 6 StepSize 2)>	The basic repetition used in the transmission of the maps using QPSK 1/2 (1 means no repetitions).	Optional	6	1, 2, 4, 6
	RCID-Usage {enable | disable}	Indicates whether RCID should be used,	Optional	disable	■ enable ■ disable

Command Modes	bs airframe configuration mode

3.9.12.2.3 Configuring the Airframe Downlink Diversity Mode Parameter

The system supports the following operation modes in the downlink:

- MIMO Matrix A or B
- Beam Forming

In MIMO Matrix A or B mode the system can use either MIMO Matrix A or Matrix B. The selection between Matrix A and Matrix B is performed automatically for each MS according to link conditions and supported MS capabilities.

MIMO Matrix A for Coverage Gain: In configuration with multiple transmit/receive antennas, a single data stream is transmitted in parallel over multiple paths. A mathematical algorithm known as Space Time Codes (STC) is used to encode the data streams to make them orthogonal to each other. This improves the signal to noise ratio at the receiver side, resulting in increased range and better throughput for subscribers that are difficult to reach (e.g. deep indoors).

MIMO Matrix B for Increased Capacity: This flavor of MIMO, also known as Spatial Multiplexing MIMO (SM-MIMO), sends an independent data stream over each antenna. Thus, in case signal conditions are good, the data rate is increased and in excellent conditions may be doubled.

Beam Forming mode is applicable only for 4x4 configurations (4-channels AU, 2x2 or 4x2 ODUs that support beam forming). The system learns the signals received from each MS in each of the antennas, and adapt the transmitted signals accordingly by sending the same data into radio signals at specific relative phases, Beamforming creates a narrower antenna beam than that generated by a baseline fixed-beam antenna, with the beam acting as a powerful adaptive directional antenna. The signal with its transmitted energy is electronically formed and directed to a particular subscriber, resulting in higher downlink gain for data, greater downlink throughput and lower interference.

To configure the Airframe Downlink Diversity mode parameter, run the following command:

npu(config-bs-66053-airframe)# dldiversity [mode < matrixAorB | beamForming>]

IMPORTANT

When creating a new BS, the Airframe Downlink Diversity mode parameter must be configured (even if configured to the default value).

Command Syntax

npu(config-bs-66053-airframe)# dldiveraity `[mode <matrixAorB | beamForming>]`

Privilege Level

10

Syntax Description

Parameter	Description	Presence	Default Value	Possible Values
mode <matrixAorB |beamForming>	The diversity mode used in downlink transmissions. beamForming is not applicable for 2-channels AU.	Optional	matrixA0rB	■ matrixAorB ■ beamForming

Command Modes

bs airframe configuration mode

3.9.12.2.4 Configuring Airframe Uplink Feedback Zone Parameter

To configure the Airframe Uplink Feedback Zone parameter, run the following command:

npu(config-bs-66053-airframe)# ulfeedbackzone permbase <(0 to 69 StepSize 1)>

IMPORTANT

When creating a new BS, the Airframe Structure Uplink Feedback Zone mandatory permbase parameter must be configured.

Command Syntax

npu(config-bs-66053-airframe)# `ulfeedbackzone` **permbase** `<(0 to 69 StepSize 1)>`

Privilege Level

10

Syntax Description

Parameter	Description	Presence	Default Value	Possible Values
[permbase <(0 to 69 StepSize 1)>]	The permutation base used in the feedback zone	Mandatory when creating a new BS.	N/A	0 - 69

Command Modes

bs airframe configuration mode

3.9.12.2.5 Configuring Airframe Downlink Data Zone Parameter

To configure the Airframe Downlink Data Zone parameter, run the following command:

npu(config-bs-66053-airframe)# dldatazone permbase <(0 to 31 StepSize 1)>

IMPORTANT

When creating a new BS, the Airframe Uplink Feedback Zone mandatory permbase parameter must be configured.

Command Syntax

npu(config-bs-66053-airframe)# dldatazone permbase `<(0 to 31 StepSize 1)>`

Privilege Level

10

Syntax Description

Parameter	Description	Presence	Default Value	Possible Values
[permbase <(0 to 31 StepSize 1)>]	The permutation base used in the downlink data zone	Mandatory when creating a new BS.	N/A	0 - 31

Command Modes

bs airframe configuration mode

3.9.12.2.6 Configuring Airframe Uplink Data Zone Parameter

To configure the Airframe Uplink Data Zone parameter, run the following command:

npu(config-bs-66053-airframe)# uldatazone permbase <(0 to 69 StepSize 1)>

IMPORTANT

When creating a new BS, the Airframe Structure Uplink Data Zone mandatory permbase parameter must be configured.

Command Syntax

npu(config-bs-66053-airframe)# uldatazone permbase `<(0 to 69 StepSize 1)>`

Privilege Level

10

Syntax Description

Parameter	Description	Presence	Default Value	Possible Values
[permbase <(0 to 69 StepSize 1)>]	The permutation base used in the uplink datazone	Mandatory when creating a new BS		0 to 69 in steps of 1

Command Modes

bs airframe configuration mode

3.9.12.2.7 Configuring Airframe MIMO Parameters

The DL MIMO feature provides a TX diversity gain or, when physical conditions allow, data rate gain (double rate).

The gain is allowed thanks to two or four transmitting antennas at the BS side, two receiving antennas at the MS side, and encoding/decoding capabilities of both MS and BS.

TX diversity gain is achieved when MS works at matrix A/STC, space time coding, AKA STTD (vertical encoding) mode.

Data rate gain is achieved when MS works at matrix B/SM, spatial multiplexing MIMO mode.

It is assumed that either all MSs support MIMO (not necessary both modes) or all MSs don't support MIMO (SIMO support only).

The DL MIMO feature influences several system elements such as frame structure, rate adaptation and feedback zone.

To configure the Airframe MIMO parameters, run the following command:

npu(config-bs-66053-airframe)# mimo [first-zone-min-size <(-1 to -1 StepSize 1) | (2 to 34 StepSize 2)>] [first-zone-max-size <(-1 to -1 StepSize 1) | (2 to 34 StepSize 2)>] [max-map-size <(-1 to -1 StepSize 1) | (10 to 300 StepSize 10)>]

Command Syntax

npu(config-bs-66053-airframe)# mimo `[first-zone-min-size <(-1 to -1 StepSize 1) | (2 to 34 StepSize 2)> ] [first-zone-max-size <(-1 to -1 StepSize 1) | (2 to 34 StepSize 2)> ] [max-map-size <(-1 to -1 StepSize 1) | (10 to 300 StepSize 10)> ]`

Privilege Level

10

Syntax Description

Parameter	Description	Presence	Default Value	Possible Values

`[first-zone-min-size <(-1 to -1 StepSize 1) | (2 to 34 StepSize 2)> ]`	Determines the initial size (in OFDMA symbols) of the first zone. When reuse 3 is used within first zone, this parameter should be equal across all BSs within deployment. See recommended values in Table 3-31 below. Other values should be avoided. In the current release this is the actual size of the first zone. For reuse 1 the default (no limitation) can be used-the actual size will be set dynamically according to the configuration. For reuse 3 a specific value must be configured.	Optional	-1 (no limitation)	-1 (no limitation) or 2xN where N=1 to 17.
`[first-zone-max-size <(-1 to -1 StepSize 1) | (2 to 34 StepSize 2)> ]`	Maximum size (in OFDMA symbols) for first zone. Used mainly for performance control capability within frame. Cannot be lower than first-zone-min-size. In the current release the value of this parameter is ignored First Zone size is defined only by first-zone-min-size.	Optional	-1 (no limitation)	-1 (no limitation) or 2xN where N=1 to 17.
[max-map-size <(-1 to -1 StepSize 1) | (10 to 300 StepSize 10)>]	Limits the maximum size of maps (in slots)	Optional	-1 (no limitation)	-1 (no limitation) or 10 to 300 in steps of 10.

Command Modes

bs airframe configuration mode

Recommended values for First Zone Minimum Size and Maximum Size:

Table 3-31: First Zone Minimum Size Recommended Value Range

Bandwidth (MHz)	First Zone Scheme*	Basic Map Repetition	Minimum Size (symbols) (up to a maximum of Y as defined below)
7/10	Full Loading	6	No Limitation or 8+2N
		4	No Limitation or 6+2N
		2	No Limitation or 4+2N
		1	No Limitation or 4+2N
	Reuse 1/3	6	N/A (non trivial configuration)
		4	8+2N
		2	6+2N
		1	6+2N
5 MHz	Full Loading	6	N/A (non trivial configuration)
		4	No Limitation or 8+2N
		2	No Limitation or 6+2N
		1	No Limitation or 4+2N
	Reuse 1/3	6	N/A (non trivial configuration)
		4	N/A (non trivial configuration)
		2	N/A (non trivial configuration)
		1	N/A (non trivial configuration)

* First Zone Scheme is being determined by the selected Map Major Groups:

- For 7/10 MHz Full Loading means all Major Groups (0-5) are selected.
- For 5MHz Full Loading means that all relevant Major Groups (0, 2, 4) are selected.

For First Zone Maximum Size the values are:

- If First Zone Minimum Size is set to No Limitations, the value range for Maximum Size is the same as for Minimum Size.
- Else, the value range is No Limitations or First Zone Minimum Size+2N, up to a maximum of Y as defined below.

The value of Y that sets the upper limit for the Minimum and Maximum Size parameters depends on the Maximum Cell Radius and Total Uplink Duration parameters, using the following formula:

Y=A-3*(Total Uplink Duration)-(Extra TTG),
where A=46 for BW of 5 or 10 MHz, and 32 for BW of 7 MHz.

Table 3-32: Calculating the Upper Limit Value (Y) for Minimum and Maximum Size

Bandwidth (MHz)	Maximum Cell Radius	Total Uplink Duration (slots)	Extra TTG (symbols)
5/10	1, 2, 4, 8	4, 6	0
	1, 2, 4, 8, 15, 23	5, 7	1
	15, 23, 30	4, 6	2
	30	5, 7	3
7	1, 2, 4, 8, 15, 23	4	0
	1, 2, 4, 8, 15, 23, 30	3, 5	1
	30	4	2

3.9.12.3 Restoring Default Values for Airframe Configuration Parameters

After enabling the Airframe configuration mode you can restore the default values for non-mandatory parameters in the following parameters tables:

- General (refer to Section 3.9.12.3.1)
- Map Zone (refer to Section 3.9.12.3.2)
- Downlink Diversity (refer to Section 3.9.12.3.3)
- Mimo (refer to Section 3.9.12.3.4)

3.9.12.3.1 Restoring the Default Values of Airframe General Parameters

To restore one the Airframe non-mandatory General parameter to the default value, run the following command:

npu(config-bs-66053-airframe)# no general [preamble-grp] [frame-offset] [nbr-beam-forming]

NOTE

Refer to Section 3.9.12.2.1 for a description and default values of the parameter.

Command Syntax	**npu(config-bs-66053-airframe)# no general** `[preamble-grp ] [frame-offset ] [nbr-beam-forming ]`
Privilege Level	10
Command Modes	bs airframe configuration mode

3.9.12.3.2 Restoring the Default Values of Airframe Map Zone Parameters

To restore one or all of the Airframe Map Zone non-mandatory parameters to their default values, run the following command:

npu(config-bs-66053-airframe)# no mapzone [size] [repetition] [RCID-Usage]

You can restore only one parameter to the default value by specifying only that parameter. For example, to restore only the size parameter to the default value, run the following command:

npu(config-bs-66053-airframe)# no mapzone size

The parameter will be restored to its default value, while the other parameters will remain unchanged.

To restore all non-mandatory parameters to their default value, run the following command:

npu(config-bs-66053-airframe)# no mapzone

NOTE

Refer to Section 3.9.12.2.2 for a description and default values of these parameters.

Command Syntax	**npu(config-bs-66053-airframe)# no mapzone** `[size ] [repetition ] [RCID-Usage ]`

Privilege Level	10
Command Modes	bs airframe configuration mode

3.9.12.3.3 Restoring the Default Value of Airframe Downlink Diversity Mode Parameter

To restore the Airframe Downlink Diversity mode parameter to its default value, run the following command:

npu(config-bs-66053-airframe)# no dldiversity mode

Since the Downlink Diversity table contains a single parameter, it is sufficient to run the following command:

npu(config-bs-66053-airframe)# no dldiversity

NOTE

Refer to Section 3.9.12.2.3 for a description and default values of these parameters.

Command Syntax	**npu(config-bs-66053-airframe)# no dldiversity** `[mode ]`
Privilege Level	10
Command Modes	bs airframe configuration mode

3.9.12.3.4 Restoring the Default Values of Airframe MIMO Parameters

To restore one or all of the Airframe MIMO parameters to their default values, run the following command:

npu(config-bs-66053-airframe)# no mimo [first-zone-min-size] [first-zone-max-size] [max-map-size]

To restore all MIMO parameters to their default values, run the following command:

npu(config-bs-66053-airframe)# no mimo

NOTE

Refer to Section 3.9.12.2.7 for a description and default values of these parameters.

Command Syntax	**npu(config-bs-66053-airframe)# no mimo** [first-zone-min-size] [first-zone-max-size] [max-map-size]
Privilege Level	10
Command Modes	bs airframe configuration mode

3.9.12.4 Terminating the Airframe Configuration Mode

Run the following command to terminate the Airframe configuration mode:

npu(config-bs-66053-airframe)# exit

IMPORTANT

Do not forget to execute the apply command before terminating the Airframe configuration mode:
npu(config-bs-66053-airframe)# apply

Command Syntax	npu(config-bs-66053-airframe)# exit
Privilege Level	10
Command Modes	bs airframe configuration mode

3.9.12.5 Displaying Configuration Information for Airframe Parameters

You can display the current configuration information for the following Airframe parameters tables:

- General (refer to Section 3.9.12.5.1)

- Map Zone (refer to Section 3.9.12.5.2)
- Downlink Diversity (refer to Section 3.9.12.5.3)
- Uplink Feedback Zone (refer to Section 3.9.12.5.4)
- Downlink Data Zone (refer to Section 3.9.12.5.5)
- Uplink Data Zone (refer to Section 3.9.12.5.6)
- Mimo (refer to Section 3.9.12.5.7)
- All (refer to Section 3.9.12.5.8)

3.9.12.5.1 Displaying Configuration Information for Airframe General Parameters

To display configuration for the Airframe General parameters, run the following command:

npu# show airframe-general bs [<(1 to 16777215 StepSize 1)>]

Specify the BS ID if you want to display configuration for a particular BS. For example, to display the Airframe General parameters of BS 66503, run the following command:

npu# show airframe-general bs 66053

Do not specify the BS ID if you want to view configuration information for all existing BSs. To display information for all BSs, run the following command:

npu# show airframe-general bs

Command Syntax	**npu# show airframe-general bs** [<(1 to 16777215 StepSize 1)>]
Privilege Level	1

Syntax Description

Parameter	Description	Presence	Default Value	Possible Values
<(1 to 16777215 StepSize 1)>	The BS ID Specify a value for this parameter if you want to display the Airframe General parameters of a specific BS. Do not specify a value for this parameter if you want to display the Airframe General parameters of all BSs.	Optional	N/A	1-16777215

Display Format

(for each existing Neighbor BS in each of the existing BSs if requested for all)

BSIDLSB :<value>

CellID :<value>

PreambleGroup :<value>

SegmentNumber :<value>

FrameNumberOffset :<value>

TotalUplinkDuration(slots) :<value>

NeighbourBeamForming :<yes/no>

Command Modes

Global command mode

3.9.12.5.2 Displaying Configuration Information for Airframe Map Zone Parameters

To display configuration for the Airframe Map Zone parameters, run the following command:

npu# show airframe-mapzone bs [<(1 to 16777215 StepSize 1)>]

Specify the BS ID if you want to display configuration for a particular BS. For example, to display the Airframe Map Zone parameters of BS 66503, run the following command:

npu# show airframe-mapzone bs 66053

Do not specify the BS ID if you want to view configuration information for all existing BSs. To display information for all BSs, run the following command:

npu# show airframe-mapzone bs

Command Syntax

npu# show airframe-mapzone bs [<(1 to 16777215 StepSize 1)>]

Privilege Level

1

Syntax Description

Parameter	Description	Presence	Default Value	Possible Values
<(1 to 16777215 StepSize 1)>	The BS ID Specify a value for this parameter if you want to display the Airframe Map Zone parameters of a specific BS. Do not specify a value for this parameter if you want to display the Airframe Map Zone parameters of all BSs.	Optional	N/A	1-16777215

Display Format

(for each existing Neighbor BS in each of the existing BSs if requested for all)

BSIDLSB :<value>

MapZoneSize(symbols) :<value>

MapMajorGroups :<value>

BasicMapRepetitions :<value>

RcidUsage :<enable/disable>

Command Modes

Global command mode

3.9.12.5.3 Displaying Configuration Information for Airframe Downlink Diversity Parameters

To display configuration for the Airframe Downlink Diversity parameters, run the following command:

npu# show airframe-dldiversity bs [<(1 to 16777215 StepSize 1)>]

Specify the BS ID if you want to display configuration for a particular BS. For example, to display the Airframe Downlink Diversity parameters of BS 66503, run the following command:

npu# show airframe-dldiversity bs 66053

Do not specify the BS ID if you want to view configuration information for all existing BSs. To display information for all BSs, run the following command:

npu# show airframe-dldiversity bs

Command Syntax

npu# show airframe-dldiversity bs [<(1 to 16777215 StepSize 1)>]

Privilege Level

1

Syntax Description

Parameter	Description	Presence	Default Value	Possible Values
<(1 to 16777215 StepSize 1)>	The BS ID Specify a value for this parameter if you want to display the Airframe Downlink Diversity parameters of a specific BS. Do not specify a value for this parameter if you want to display the Airframe Downlink Diversity parameters of all BSs.	Optional	N/A	1-16777215

Display Format

(for each existing Neighbor BS in each of the existing BSs if requested for all)

BSIDLSB :<value>

DownlinkDataDiversityMode :<value>

Command Modes

Global command mode

3.9.12.5.4 Displaying Configuration Information for Airframe Uplink Feedback Zone Parameters

To display configuration for the Airframe Uplink Feedback Zone parameters, run the following command:

npu# show airframe-ulfeedbackzone bs [<(1 to 16777215 StepSize 1)>]

Specify the BS ID if you want to display configuration for a particular BS. For example, to display the Airframe Uplink Feedback Zone parameters of BS 66503, run the following command:

npu# show airframe-ulfeedbackzone bs 66053

Do not specify the BS ID if you want to view configuration information for all existing BSs. To display information for all BSs, run the following command:

npu# show airframe-ulfeedbackzone bs

Command Syntax

npu# show airframe-ulfeedbackzone bs [<(1 to 16777215 StepSize 1)>]

Privilege Level

1

Syntax Description

Parameter	Description	Presence	Default Value	Possible Values
<(1 to 16777215 StepSize 1)>	The BS ID Specify a value for this parameter if you want to display the Airframe Uplink Feedback Zone parameters of a specific BS. Do not specify a value for this parameter if you want to display the Airframe Uplink Feedback Zone parameters of all BSs.	Optional	N/A	1-16777215

Display Format (for each existing Neighbor BS in each of the existing BSs if requested for all)	BSIDLSB :<value> ULFeedbackZonePermutationBase :<value>
Command Modes	Global command mode

3.9.12.5.5 Displaying Configuration Information for Airframe Downlink Data Zone Parameters

To display configuration for the Airframe Downlink Data Zone parameters, run the following command:

npu# show airframe-dldatazone bs [<(1 to 16777215 StepSize 1)>]

Specify the BS ID if you want to display configuration for a particular BS. For example, to display the Airframe Downlink Data Zone parameters of BS 66503, run the following command:

npu# show airframe-dldatazone bs 66053

Do not specify the BS ID if you want to view configuration information for all existing BSs. To display information for all BSs, run the following command:

npu# show airframe-dldatazone bs

Command Syntax	**npu# show airframe-dldatazone bs** [<(1 to 16777215 StepSize 1)>]
Privilege Level	1

Syntax Description

Parameter	Description	Presence	Default Value	Possible Values
<(1 to 16777215 StepSize 1)>	The BS ID Specify a value for this parameter if you want to display the Airframe Downlink Data Zone parameters of a specific BS. Do not specify a value for this parameter if you want to display the Airframe Downlink Data Zone parameters of all BSs.	Optional	N/A	1-16777215

Display Format

(for each existing Neighbor BS in each of the existing BSs if requested for all)

BSIDLSB :<value>

DLDATAZonePermutationBase :<value>

Command Modes

Global command mode

3.9.12.5.6 Displaying Configuration Information for Airframe Uplink Data Zone Parameters

To display configuration for the Airframe Uplink Data Zone parameters, run the following command:

npu# show airframe-uldatazone bs [<(1 to 16777215 StepSize 1)>]

Specify the BS ID if you want to display configuration for a particular BS. For example, to display the Airframe Uplink Data Zone parameters of BS 66503, run the following command:

npu# show airframe-uldatazone bs 66053

Do not specify the BS ID if you want to view configuration information for all existing BSs. To display information for all BSs, run the following command:

npu# show airframe-uldatazone bs

Command Syntax

npu# show airframe-uldatazone bs [<(1 to 16777215 StepSize 1)>]

Privilege Level

1

Syntax Description

Parameter	Description	Presence	Default Value	Possible Values
<(1 to 16777215 StepSize 1)>	The BS ID Specify a value for this parameter if you want to display the Airframe Uplink Data Zone parameters of a specific BS. Do not specify a value for this parameter if you want to display the Airframe Uplink Data Zone parameters of all BSs.	Optional	N/A	1-16777215

Display Format

(for each existing Neighbor BS in each of the existing BSs if requested for all)

BSIDLSB :<value>

ULDATAPermutationBase :<value>

Command Modes

Global command mode

3.9.12.5.7 Displaying Configuration Information for Airframe MIMO Parameters

To display configuration for the Airframe MIMO parameters, run the following command:

npu# show airframe-mimo bs [<(1 to 16777215 StepSize 1)>]

Specify the BS ID if you want to display configuration for a particular BS. For example, to display the Airframe MIMO parameters of BS 66503, run the following command:

npu# show airframe-mimo bs 66053

Do not specify the BS ID if you want to view configuration information for all existing BSs. To display information for all BSs, run the following command:

npu# show airframe-mimo bs

Command Syntax

npu# show airframe-mimo bs [<(1 to 16777215 StepSize 1)>]

Privilege Level

1

Syntax Description

Parameter	Description	Presence	Default Value	Possible Values
<(1 to 16777215 StepSize 1)>	The BS ID Specify a value for this parameter if you want to display the Airframe Dynamic Permutation parameters of a specific BS. Do not specify a value for this parameter if you want to display the Airframe Dynamic Permutation parameters of all BSs.	Optional	N/A	1-16777215

Display Format

(for each existing Neighbor BS in each of the existing BSs if requested for all)

BSIDLSB :<value>

firstzoneminsize :<value>

firstzonemaxsize :<value>

maxmapsize :<value>

Command Modes

Global command mode

3.9.12.5.8 Displaying Configuration Information for All Airframe Parameters

To display configuration for all Airframe parameters, run the following command:

npu# show airframe-all bs [<(1 to 16777215 StepSize 1)>]

Specify the BS ID if you want to display configuration for a particular BS. For example, to display all Airframe parameters of BS 66503, run the following command:

npu# show airframe-all bs 66053

Do not specify the BS ID if you want to view configuration information for all existing BSs. To display information for all BSs, run the following command:

npu# show airframe-all bs

Command Syntax

npu# show airframe-all bs [<(1 to 16777215 StepSize 1)>]

Privilege Level

10

Syntax Description

Parameter	Description	Presence	Default Value	Possible Values
<(1 to 16777215 StepSize 1)>	The BS ID Specify a value for this parameter if you want to display all Airframe parameters of a specific BS. Do not specify a value for this parameter if you want to display all Airframe parameters of all BSs.	Optional	N/A	1-16777215

Command Modes

Global command mode

3.9.13 Managing BS Bearer Interface Parameters

After enabling the BS configuration mode, you can execute the following tasks:

- Configure one or more of the Bearer Interface parameters (refer to Section 3.9.13.1).
- Restore the default values of some or all of the Bearer Interface parameters (refer to Section 3.9.13.2).

You can display configuration information for the Bearer Interface parameters of a selected or all existing BSs (refer to Section 3.9.13.3).

3.9.13.1 Configuring Bearer Interface Parameters

To configure the Bearer Interface Parameters:

From the BS configuration mode, run the following command:

npu(config-bs-66053)# bearer [ip-address <ip address>] [ip-subnetmask <ip address>] [dflt-gw <ip address>] [bearer-vlan <(9 to 9 StepSize 1) | (11 to 100 StepSize 1) |(110 to 4094 StepSize 1)>]

Command Syntax

npu(config-bs-66053)# bearer `[ip-address <ip address> ] [ip-subnetmask <ip address> ] [dflt-gw <ip address> ] [bearer-vlan <(9 to 9 StepSize 1) | (11 to 100 StepSize 1) |(110 to 4094 StepSize 1)> ]`

Privilege Level

10

Syntax Description

Parameter	Description	Presence	Defaul t Value	Possible Values

[ip-address <ip address>]	The IP address of the bearer interface of the BS. Must be unique in the network. All BS bearer interfaces of the unit should be in the same subnet, together with the NPU's bearer interface (if applicable).	Mandatory when creating a new BS.	N/A	IP address
[ip-subnetmask <ip address>]	The IP subnet mask of the bearer interface of the BS	Mandatory when creating a new BS.	N/A	Subnet mask
[dflt-gw <ip address>]	The IP address of the default gateway of the bearer interface of the BS. Must be in the same subnet with the BS bearer ip interface.	Mandatory when creating a new BS.	N/A	IP address
[bearer-vlan <(9 to 9 StepSize 1) | (11 to 100 StepSize 1) |(110 to 4094 StepSize 1)>]	The VLAN ID of the bearer interface of the BS. Must be equal to the VLAN ID of the Bearer interface (see Section 3.4.2.3.5)	Optional	11	9, 11-100, 110-4094.

Command Modes: bs configuration mode

IMPORTANT

When creating a new BS, the Bearer Interface mandatory parameters must be configured.

3.9.13.2 Restoring the Default Values of Bearer Interface Parametes

To restore the default values of the Bearer Interface bearer-vlan parameter, run the following command:

npu(config-bs-66053)# no bearer [bearer-vlan]

NOTE

Refer to Section 3.9.13.1 for a description and default value of this parameter.

Command Syntax	**npu(config-bs-66053)# no bearer** [bearer-vlan]
Privilege Level	10
Command Modes	bs configuration mode

3.9.13.3 Displaying Configuration Information for Bearer Interface Parameters

To display configuration information of Bearer Interface parameters, run the following command:

npu# show bearer bs [<(1 to 16777215 StepSize 1)

Specify the BS ID if you want to display information for a particular BS. For example, to display the Bearer Interface parameters of BS 66053, run the following command:

npu# show bearer bs 66053

Do not specify this parameter if you want to view information for all existing BSs. To display information for all BSs, run the following command:

npu# show bearer bs

Command Syntax	**npu# show bearer bs** [<(1 to 16777215 StepSize 1)
Privilege Level	1

Syntax Description

Parameter	Description	Presence	Default Value	Possible Values
<(1 to 16777215 StepSize 1)>	The BS ID Specify a value for this parameter if you want to display Bearer Interface parameters of a specific BS. Do not specify a value for this parameter if you want to display Bearer Interface parameters of all BSs.	Optional	N/A	1-16777215

Display Format

(for each existing BS if requested for all BSs)

BSIDLSB :<value>

IPAddress :<value>

IPsubnetMask :<value>

DefaultGateway :<value>

BearerVLANID :<value>

ASNGWStatus :<value>

Command Modes

Global command mode

In addition to the configurable parameters, the ASNGW Status parameter is also displayed. This is the Bearer Interface connectivity status (up/down/unknown). If keep alive is disabled the connectivity status will be unknown. Note that the keep-alive mechanism will start only after first registration, and until then this mechanism is disabled and connectivity status is unknown.

3.9.14 Managing Authentication Relay Parameters

After enabling the BS configuration mode, you can execute the following tasks:

- Configure one or more of the Authentication parameters (refer to Section 3.9.14.1).
- Restore the default values of some or all of the Authentication non-mandatory parameters (refer to Section 3.9.14.2).

You can display configuration information for the Authentication parameters of a selected or all existing BSs (refer to Section 3.9.14.3).

3.9.14.1 Configuring Authentication Parameters

To configure the Authentication parameters:

From the BS configuration mode, run the following command:

npu(config-bs-66053)# auth-general [dflt-auth-ip-address <ip address>] [suspendedeapprocthrshld <(0 to 10000 StepSize 1)>] [activemsthrshld <(0 to 1024 StepSize 1)>] [maxeaproundsthrshld <(0 to 100 StepSize 1)>]

Command Syntax

npu(config-bs-66053)# auth-general `[dflt-auth-ip-address <ip address> ] [suspendedeapprocthrshld <(0 to 10000 StepSize 1)> ] [activemsthrshld <(0 to 1024 StepSize 1)> ] [maxeaproundsthrshld <(0 to 100 StepSize 1)> ] ]`

Privilege Level

10

Syntax Description

Parameter	Description	Presence	Default Value	Possible Values
[dflt-auth-ip-address <ip address>]	Identifier (IP address) of “default” authenticator ASN GW.	Mandatory when creating a new BS.	N/A	IPv4 address
[suspendedeapprocthrshld <(0 to 10000 StepSize 1)>]	Suspended EAP authentication process threshold. It is used to set an alarm. A value of 0 means that the alarm is disabled. In the current release the relevant alarm is not supported.	Optional	10000	0 to 10000

[activemsthrshld <(0 to 1024 StepSize 1)>]	Threshold for the number of MSs in active operation state (not Idle) served by the BS. Exceeding this threshold will set the alarm “Excessive MS number”. A value of 0 means that the alarm is disabled.	Optional	1024	0 to 1024
[maxeaproundsthrshld <(0 to 100 StepSize 1)>]	Threshold for the number of EAP rounds in one direction in the same EAP session. When exceeding this threshold; alarm is set. May be used to protect the system from hazard EAP sessions with extreme number of messaging round trips. A value of "0" means the alarm is disabled. A value of 0 means that the alarm is disabled. In the current release the relevant alarm is not supported.	Optional	100	0 to 100

Command Modes: bs configuration mode

IMPORTANT

When creating a new BS, the Authentication dflt-auth-ip-address mandatory parameter must be configured.

3.9.14.2 Restoring the Default Values of Authentication Parametes

To restore the default values of some or all of the Authentication parameters, run the following command:

npu(config-bs-66053)# no auth-general [suspendedeapprocthrshld] [activemsthrshld] [maxeaproundsthrshld]

You can restore only some parameters to their default values by specifying only those parameters. For example, to restore only the activemsthrshld and

maxeaproundsthrshld parameters to the default values, run the following command:

npu(config-bs-66053)# no auth-general activemsthrshld maxeaproundsthrshld

These parameters will be restored to their default values, while the other parameters will remain unchanged.

To restore all Authentication parameters to their default value, run the following command:

npu(config-bs-66053)# no auth-general

NOTE

Refer to Section 3.9.14.1 for a description and default values of these parameters.

Command Syntax	**npu(config-bs-66053)# no auth-general** [suspendedeapprocthrshld] [activemsthrshld] [maxeaproundsthrshld]
Privilege Level	10
Command Modes	bs configuration mode

3.9.14.3 Displaying Configuration Information for Authentication Parameters

To display configuration information of Authentication parameters, run the following command:

npu# show auth-general bs [<(1 to 16777215 StepSize 1)

Specify the BS ID if you want to display information for a particular BS. For example, to display the Authentication parameters of BS 66053, run the following command:

npu# show auth-general bs 66053

Do not specify this parameter if you want to view information for all existing BSs. To display information for all BSs, run the following command:

npu# show auth-general bs

Command Syntax

npu# show auth-general bs [<(1 to 16777215 StepSize 1)

Privilege Level

1

Syntax Description

Parameter	Description	Presence	Default Value	Possible Values
<(1 to 16777215 StepSize 1)>	The BS ID Specify a value for this parameter if you want to display Authentication parameters of a specific BS. Do not specify a value for this parameter if you want to display Authentication parameters of all BSs.	Optional	N/A	1-16777215

Display Format

(for each existing BS if requested for all BSs)

BSIDLSB :<value>

Command Modes

Global command mode

3.9.15 Displaying Status Information for Handover Control Parameters

After enabling the BS configuration mode, you can display information for the Handover Control parameters of a selected or all existing BSs (refer to Section 3.9.16).

To display configuration and status information of Handover Control parameters, run the following command:

npu# show hoctrl bs [<(1 to 16777215 StepSize 1)

Specify the BS ID if you want to display information for a particular BS. For example, to display the Handover Control parameters of BS 66053, run the following command:

npu# show hoctrl bs 66053

Do not specify this parameter if you want to view information for all existing BSs. To display information for all BSs, run the following command:

npu# show hoctrl bs

Command Syntax

npu# show hoctrl bs [<(1 to 16777215 StepSize 1)

Privilege Level

1

Syntax Description

Parameter	Description	Presence	Default Value	Possible Values
<(1 to 16777215 StepSize 1)>	The BS ID Specify a value for this parameter if you want to display Handover Control parameters of a specific BS. Do not specify a value for this parameter if you want to display Handover Control parameters of all BSs.	Optional	N/A	1-16777215

Display Format

(for each existing BS if requested for all BSs)

BSIDLSB :<value>

SchedulingServiceSupport :<value>

CINRReuse :<value>

Command Modes

Global command mode

The following status parameters related to Handover Control are displayed:

Parameter	Description	Possible Values
SchedulingServiceSupport	Scheduling Service Support. A string of two hexadecimal digits that can be presented as 8 bits where bits 5-7 are always 0. Bits 0-4 indicate whether specific services are supported, where a value of 1 means that the service is supported: UGS (0), RT-PS(1), NRT-PS(2), BE(3), ERT-PS(4). This parameter is available for populating the srvcsupport parameter in the relevant Neighbor BS General parameters tables.	A string of two hexadecimal digits.
CINRReuse	The reuse type (calculated by the BS) to be advertised for this BS in NBR-ADV messages.	■ reuse1 ■ reuse3

3.9.16 Managing Bearer Traffic QoS Marking Rules

Up to 16383 Bearer Traffic QoS Marking Rules may be defined.

To configure a Bearer Traffic QoS Marking Rule:

1. Enable the BS Bearer Traffic QoS Marking Rule configuration mode for the selected Bearer Traffic QoS Marking Rule (refer to Section 3.9.16.1)
2. You can now execute any of the following tasks:
   - » Configure the parameters of the Bearer Traffic QoS Marking Rule (refer to Section 3.9.16.2)
   - » Restore the default values of Bearer Traffic QoS Marking Rule non-mandatory parameters (refer to Section 3.9.16.3)
   - » Terminate the Bearer Traffic QoS Marking Rule configuration mode (refer to Section 3.9.16.4)

In addition, you can, at any time, display configuration information for Bearer Traffic QoS Marking Rules (refer to Section 3.9.16.6) or delete an existing Bearer Traffic QoS Marking Rule (refer to Section 3.9.16.5).

3.9.16.1 Enabling the Bearer Traffic QoS Marking Rule Configuration Mode\Creating a Bearer Traffic QoS Marking Rule

To configure the parameters of a Bearer Traffic QoS Marking Rule, first enable the BS Bearer Traffic QoS Marking Rule configuration mode for the specific Bearer Traffic QoS Marking Rule. Run the following command to enable the BS Bearer Traffic QoS Marking Rule configuration mode. You can also use this command to create a new Bearer Traffic QoS Marking Rule.

Note that for a new Bearer Traffic QoS Marking Rule this command only defines the Bearer Traffic QoS Marking Rule number, and that the Bearer Traffic QoS Marking Rule is not fully created until completing configuration of all mandatory parameters and executing the **apply** command (must be executed before exiting the Bearer Traffic QoS Marking Rule configuration mode). Also when updating an existing Bearer Traffic QoS Marking Rule, the **apply** command must be executed prior to termination the Bearer Traffic QoS Marking Rule configuration mode.

npu(config-bs-66053)# bearertrafficqos <(1 to 16383 StepSize 1)>

For example, to define a new Bearer Traffic QoS Marking Rule number 1, or to enable the configuration mode for Bearer Traffic QoS Marking Rule 1, run the following command:

npu(config-bs-66053)# bearertrafficqos 1

If you use this command to create a new Bearer Traffic QoS Marking Rule, the configuration mode for this Bearer Traffic QoS Marking Rule is automatically enabled, after which you can execute any of the following tasks:

- Configure one or more of the parameters of the Bearer Traffic QoS Marking Rule (refer to Section 3.9.16.2)
- Restore the default values of Bearer Traffic QoS Marking Rule non-mandatory parameters (refer to Section 3.9.16.3)

After executing the above tasks, you can terminate the Bearer Traffic QoS Marking Rule configuration mode (refer to Section 3.9.16.4) and return to the BS configuration mode.

Command Syntax	**npu(config-bs-66053)# bearertrafficqos** <(1 to 16383 StepSize 1)>
Privilege Level	10

Syntax Description

Parameter	Description	Presence	Default Value	Possible Values
`bearertrafficqos <(1 to 16383 StepSize 1)>`	The Bearer Traffic QoS Marking Rule number	Mandatory		1 - 16383

Command Modes

BS configuration mode

For example, to define Bearer Traffic QoS Marking Rule 1 for BS 66053, run the following command:

```
npu(config-bs-66053)# bearertrafficqos 1
```

NOTE

The following examples are for BS Bearer Traffic QoS Marking Rule configuration mode for bs-66053, bearer traffic qos marking rule (bearertrafficqos)-1.

3.9.16.2 Configuring Bearer Traffic QoS Marking Rule Parameters

To configure the Bearer Traffic QoS Marking Rule parameters, run the following command:

npu(config-bs-66053-bearertrafficqos-1)# mrkngrule [rule-status {Enable | Disable}] [rule-name <string (32)>] [srvcflow-datadeliverytype {uGS | rTVR | nRTVR | bE | eRTVR | any}] [srvcflow-trafficpriority <(0 to 7 StepSize 1) | (255 to 255 StepSize 1)>] [srvcflow-mediaflowtype <string (32)>] [enable-srvcflow-mediaflowtype {TRUE | FALSE}] [outerdscp <(0 to 63 StepSize 1)>] [bp8021p <(0 to 7 StepSize 1)>]

IMPORTANT

When creating a new Bearer Traffic QoS Marking Rule, the mandatory parameters must be configured.

Command Syntax

npu(config-bs-66053-bearertrafficqos-1)# mrkngrule `[rule-status {Enable | Disable}] [rule-name <string (32)>] [srvcflow-datadeliverytype {uGS | rTVR | nRTVR | bE | eRTVR | any}] [srvcflow-trafficpriority <(0 to 7 StepSize 1) | (255 to 255 StepSize 1)>] [srvcflow-mediaflowtype <string (32)>] [enable-srvcflow-mediaflowtype {TRUE | FALSE}] [outerdscp <(0 to 63 StepSize 1)>] [bp8021p <(0 to 7 StepSize 1)>]`

Privilege Level

10

Syntax Description

Parameter	Description	Presence	Default Value	Possible Values
rule-status {Enable | Disable}	The Bearer Traffic QoS Marking Rule status	Optional	Enable	■ Enable ■ Disable
rule-name <string (32)>	The Bearer Traffic QoS Marking Rule name (descriptor).	Optional	null	A string of up to 32 characters
srvcflow-datadelivery type {uGS | rTVR | nRTVR | bE | eRTVR | any}	Service Flow Type of data delivery services.	Optional	any	■ uGS ■ rTVR ■ nRTVR ■ bE ■ eRTVR ■ any
srvcflow-trafficpriority <(0 to 7 StepSize 1) | (255 to 255 StepSize 1)>	Service Flow Traffic Priority. A value of 255 means "ANY"	Optional	255	0-7 or 255

srvcflow-mediaflowtype <string (32)>	One of key entries into the traffic marking rules table. Media Flow Type should be defined in ASN-GW or AAA server. Only relevant if enable-srvcflow-mediaflowtype (see below) is TRUE.	Mandatory when creating a new rule (if relevant)	N/A	A string of up to 32 characters
enable-srvcflow-mediaflowtype {TRUE | FALSE}	If TRUE, the srvcflow-mediaflowtype (see above) will be considered. when looking for a match. If FALSE it will not be considered.	Mandatory when creating a new rule		■ TRUE ■ FALSE
outerdscp <(0 to 63 StepSize 1)>	DSCP value to be used for marking of outer IP header (IP/GRE).	Optional	0	0 - 63
bp8021p <(0 to 7 StepSize 1)>	802.1p priority to be used for marking of traffic	Optional	0	0 - 7

Command Modes: bs bearer traffic qos marking rule configuration mode

3.9.16.3 Restoring Default Values for Bearer Traffic QoS Marking Rule Configuration Parameters

After enabling the Bearer Traffic QoS Marking Rule configuration mode you can restore the default values for non-mandatory parameters.

To restore some or all of the Bearer Traffic QoS Marking Rule non-mandatory parameters to their default values, run the following command:

npu(config-bs-66053-bearertrafficqos-1)# no mrkngrule [rule-status] [rule-name] [srvcflow-datadeliverytype [srvcflow-trafficpriority] [outerdscp] [bp8021p]

You can restore only one or several parameters to the default values by specifying only those parameters. For example, to restore only the outerdscp to the default value, run the following command:

npu(config-bs-66053-bearertrafficqos-1)# no mrkngrule outerdscp

The parameter will be restored to its default value, while the other parameters will remain unchanged.

To restore all Bearer Traffic QoS Marking Rule non-mandatory parameters to their default value, run the following command:

npu(config-bs-66053-bearertrafficqos-1)# no mrkngrule

NOTE

Refer to Section 3.9.16.2 for a description and default values of these parameters.

Command Syntax	**npu(config-bs-66053-bearertrafficqos-1)# no mrkngrule** `[rule-status ] [rule-name ] [srvcflow-datadeliverytype [srvcflow-trafficpriority ] [outerdscp ] [bp8021p ]`
Privilege Level	10
Command Modes	bs bearer traffic qos marking rule configuration mode

3.9.16.4 Terminating the Bearer Traffic QoS Marking Rule Configuration Mode

Run the following command to terminate the Bearer Traffic QoS Marking Rule configuration mode:

npu(config-bs-66053-bearertrafficqos-1)# exit

Command Syntax	npu(config-bs-66053-bearertrafficqos-1)# exit
Privilege Level	10
Command Modes	bs bearer traffic qos marking rule configuration mode

3.9.16.5 Deleting a Bearer Traffic QoS Marking Rule

Run the following command from the BS configuration mode to delete a Bearer Traffic QoS Marking Rule:

npu(config-bs 66053)# no bearertrafficqos <(1 to 16383 StepSize 1)>

Command Syntax

npu(config-bs 66053)# no bearertrafficqos <(1 to 16383 StepSize 1)>

Privilege Level

10

Syntax Description

Parameter	Description	Presence	Default Value	Possible Values
<(1 to 16383 StepSize 1)>	The Bearer Traffic QoS Marking Rule number	Mandatory	N/A	1-16383

Command Modes

bs configuration mode

3.9.16.6 Displaying Configuration Information for Bearer Traffic QoS Marking Rules

To display configuration for the parameters of a specific or all Bearer Traffic QoS Marking Rules, run the following command:

npu# show bearertrafficqos bs [<(1 to 16777215 StepSize 1)> number <(1 to 16383 StepSize 1)>]

Specify the BS ID and Bearer Traffic QoS Marking Rule number if you want to display configuration for a particular Bearer Traffic QoS Marking Rule. For example, to display the parameters of Bearer Traffic QoS Marking Rule 1 in BS 66053, run the following command:

npu# show bearertrafficqos bs 66053 number 1

Do not specify these parameters if you want to view configuration information for all existing Bearer Traffic QoS Marking Rules. To display information for all Bearer Traffic QoS Marking Rules, run the following command:

npu# show bearertrafficqos bs

Command Syntax

npu# show bearertrafficqos bs [<(1 to 16777215 StepSize 1)> number <(1 to 16383 StepSize 1)>]

Privilege Level

1

Syntax Description

Parameter	Description	Presence	Default Value	Possible Values
<(1 to 16777215 StepSize 1)>	The BS ID Specify a value for this parameter if you want to display the parameters of a specific Bearer Traffic QoS Marking Rule. Do not specify a value for this parameter if you want to display the parameters of all Bearer Traffic QoS Marking Rules.	Optional	N/A	1-16777215
number <(1 to 16383 StepSize 1)>]	The Bearer Traffic QoS Marking Rule number. To be used only if you want to display the parameters of a specific Bearer Traffic QoS Marking Rule.	Optional	N/A	1-16383

Display Format

(for each existing Service Mapping Rule if requested for all Service Mapping Rules)

BSIDLSB :<value>

RuleNumber :<value>

RuleStatus :<value>

RuleName :<value>

ServiceFlowMediaFlowType :<value>

ServiceFlowTrafficPriority(255meansany) :<value>

ServiceFlowMediaFlowType :<value>

EnableServiceFlowMediaFlowType :<value>

OuterDSCP :<value>

802.1pPriority :<value>

Command Modes

Global command mode

3.9.17 Managing Control Traffic QoS Marking Rules

Control Traffic QoS Marking Rules are used to define the DSCP and VLAN Priority (802.1p) value to be used for marking of internal management traffic (management traffic to/from the AUs) and intra-ASN (R8/R6) management traffic.

To configure the Control Traffic QoS Marking Rules:

1. Enable the Control Traffic QoS Marking Rules configuration mode (refer to Section 3.9.17.1)
2. You can now execute any of the following tasks:
   - Configure one or more of the Control Traffic QoS Marking Rules parameters tables (refer to Section 3.9.17.2)
   - Restore the default values of parameters in one or more of the Control Traffic QoS Marking Rules parameters tables (refer to Section 3.9.17.3)
   - Terminate the Control Traffic QoS Marking Rules configuration mode (refer to Section 3.9.17.4)

In addition, you can, at any time, display configuration information for each of the parameters tables (refer to Section 3.9.17.5).

3.9.17.1 Enabling the Control Traffic QoS Marking Rules Configuration Mode

To configure the Control Traffic QoS Marking Rules parameters, first enable the Control Traffic QoS Marking Rules configuration mode. Run the following command to enable the Control Traffic QoS Marking Rules configuration mode.

npu(config-bs-66053)# ctrltrafficqos

The configuration mode for the Control Traffic QoS Marking Rules is enabled, after which you can execute any of the following tasks:

- Configure one or more of the Control Traffic QoS Marking Rules parameters tables (refer to Section 3.9.17.2)
- Restore the default values of parameters in one or more of the parameters tables (refer to Section 3.9.17.3)

After executing the above tasks, you can terminate the Control Traffic QoS Marking Rules configuration mode (refer to Section 3.9.17.4) and return to the BS configuration mode.

Command Syntax	`npu(config-bs-66053)# ctrltrafficqos`
Privilege Level	10
Command Modes	bs configuration mode

3.9.17.2 Configuring Control Traffic QoS Marking Rules Parameters

After enabling the Control Traffic QoS Marking Rules configuration mode you can configure the following parameters tables:

- Internal Management (refer to Section 3.9.17.2.1)
- Intra ASN (refer to Section 3.9.17.2.2)

3.9.17.2.1 Configuring Internal Management Traffic QoS Marking Rules Parameters

To configure the Internal Management Traffic QoS Marking Rules, run the following command:

npu(config-bs-66053-ctrltrafficqos)# intmngmnt [dscp <(0 to 63 StepSize 1)>] [inter8021p <(0 to 7 StepSize 1)>]

Command Syntax	**npu(config-bs-66053-ctrltrafficqos)# intmngmnt** `[dscp <(0 to 63 StepSize 1)> ] [inter8021p <(0 to 7 StepSize 1)> ]`
Privilege Level	10

Syntax Description

Parameter	Description	Presence	Default Value	Possible Values
dscp <(0 to 63 StepSize 1)>	DSCP priority value to be used for marking of internal management traffic	Optional	0	0 - 63
inter8021p <(0 to 7 StepSize 1)>	802.1p priority value to be used for marking of internal management traffic	Optional	0	0 - 7

Command Modes

bs control traffic qos marking rules (ctrltrafficqos) configuration mode

3.9.17.2.2 Configuring the Intra ASN Traffic QoS Marking Rules

To configure the Intra ASN Traffic QoS Marking Rules parameters, run the following command:

npu(config-bs-66053-ctrltrafficqos)# intraasn [dscp <(0 to 63 StepSize 1)>] [intra8021p <(0 to 7 StepSize 1)>]

Command Syntax

npu(config-bs-66053-ctrltrafficqos)# intraasn `[dscp <(0 to 63 StepSize 1)> ] [intra8021p <(0 to 7 StepSize 1)> ]`

Privilege Level

10

Syntax Description

Parameter	Description	Presence	Default Value	Possible Values
dscp <(0 to 63 StepSize 1)>	DSCP priority value to be used for marking of intra-ASN (R8/R6) traffic	Optional	0	0 - 63
intra8021p <(0 to 7 StepSize 1)>	802.1p priority value to be used for marking of intra-ASN (R8/R6) traffic	Optional	0	0 - 7

Command Modes	bs control traffic qos marking rules (ctrltrafficqos) configuration mode

3.9.17.3 Restoring Default Values for Control Traffic QoS Marking Rules Configuration Parameters

After enabling the Control Traffic QoS Marking Rules configuration mode you can restore the default values for parameters in the following parameters tables:

- Internal Management (refer to Section 3.9.17.3.1)
- Intra ASN (refer to Section 3.9.17.3.2)

3.9.17.3.1 Restoring the Default Values of Internal Management Traffic QoS Marking Rules Parameters

To restore one or all of the Internal Management Traffic QoS Marking Rules parameters to their default values, run the following command:

npu(config-bs-66053-ctrltrafficqos)# no intmngmnt [dscp] [inter8021p]

You can restore only one parameter to its default values by specifying only that parameter. For example, to restore only dscp to the default value, run the following command:

npu(config-bs-66053-ctrltrafficqos)# no intmngmnt dscp

The parameter will be restored to its default value, while the other parameter will remain unchanged.

To restore all Internal Management Traffic QoS Marking Rules parameters to their default value, run the following command:

npu(config-bs-66053-ctrltrafficqos)# no intmngmnt

NOTE

Refer to Section 3.9.17.2.1 for a description and default values of these parameters.

Command Syntax	`npu(config-bs-66053-ctrltrafficqos)# no intmngmnt [dscp ] [inter8021p ]`
Privilege Level	10

Command Modes	bs control traffic qos marking rules (ctrltrafficqos) configuration mode

3.9.17.3.2 Restoring the Default Values of Intra ASN Traffic QoS Marking Rules Parameters

To restore one or all of the Intra ASN Traffic QoS Marking Rules parameters to their default values, run the following command:

npu(config-bs-66053-ctrltrafficqos)# no intraasn [dscp] [intra8021p]

You can restore only one parameter to its default values by specifying only that parameter. For example, to restore only dscp to the default value, run the following command:

npu(config-bs-66053-ctrltrafficqos)# no intraasn dscp

The parameter will be restored to its default value, while the other parameter will remain unchanged.

To restore all Intra ASN Traffic QoS Marking Rules parameters to their default value, run the following command:

npu(config-bs-66053-ctrltrafficqos)# no intraasn

NOTE

Refer to Section 3.9.17.2.2 for a description and default values of these parameters.

Command Syntax	`npu(config-bs-66053-ctrltrafficqos)# no intraasn [dscp ] [intra8021p ]`
Privilege Level	10
Command Modes	bs control traffic qos marking rules (ctrltrafficqos) configuration mode

3.9.17.4 Terminating the Control Traffic QoS Marking Rules Configuration Mode

Run the following command to terminate the Control Traffic QoS Marking Rules configuration mode:

npu(config-bs-66053-ctrltrafficqos)# exit

Command Syntax	npu(config-bs-66053-ctrltrafficqos)# exit
Privilege Level	10
Command Modes	bs control traffic qos marking rules (ctrltrafficqos) configuration mode

3.9.17.5 Displaying Configuration Information for Control Traffic QoS Marking Rules Parameters

You can display the current configuration information for the following parameters tables:

- Internal Management (refer to Section 3.9.17.5.1)
- Intra ASN (refer to Section 3.9.17.5.2)
- All (refer to Section 3.9.17.5.3)

3.9.17.5.1 Displaying Configuration Information for Internal Management Traffic QoS Marking Rules Parameters

To display configuration for the Internal Management Traffic QoS Marking Rules parameters, run the following command:

npu# show ctrltrafficqos-intmngmnt bs [<(1 to 16777215 StepSize 1)

Specify the BS ID if you want to display configuration for a particular BS. For example, to display the Internal Management Traffic QoS Marking Rules parameters of BS 66053, run the following command:

npu# show ctrltrafficqos-intmngmnt bs 66053

Do not specify this parameter if you want to view configuration information for all existing BSs. To display information for all BSs, run the following command:

npu# show ctrltrafficqos-intmngmnt bs

Command Syntax	**npu# show ctrltrafficqos-intmngmnt bs** [<(1 to 16777215 StepSize 1)

Privilege Level

1

Syntax Description

Parameter	Description	Presence	Default Value	Possible Values
<(1 to 16777215 StepSize 1)>	The BS ID Specify a value for this parameter if you want to display the Internal Management Traffic QoS Marking Rules parameters of a specific BS. Do not specify a value for this parameter if you want to display the Internal Management Traffic QoS Marking Rules parameters of all BSs.	Optional	N/A	1-16777215

Display Format

(for each existing BS if requested for all BSs)

BSIDLSB :<value>

InternalManagementDSCP :<value>

InternalManagement802.1pPriority :<value>

Command Modes

Global command mode

3.9.17.5.2 Displaying Configuration Information for Intra ASN Traffic QoS Marking Rules Parameters

To display configuration for the Intra ASN Traffic QoS Marking Rules parameters, run the following command:

npu# show ctrltrafficqos-intraasn bs [<(1 to 16777215 StepSize 1)

Specify the BS ID if you want to display configuration for a particular BS. For example, to display the Intra ASN Traffic QoS Marking Rules parameters of BS 66053, run the following command:

npu# show ctrltrafficqos-intraasn bs 66053

Do not specify this parameter if you want to view configuration information for all existing BSs. To display information for all BSs, run the following command:

npu# show ctrltrafficqos-intraasn bs

Command Syntax

npu# show ctrltrafficqos-intraasn bs [<(1 to 16777215 StepSize 1)

Privilege Level

1

Syntax Description

Parameter	Description	Presence	Default Value	Possible Values
<(1 to 16777215 StepSize 1)>	The BS ID Specify a value for this parameter if you want to display the Intra ASN Traffic QoS Marking Rules parameters of a specific BS. Do not specify a value for this parameter if you want to display the Intra ASN Traffic QoS Marking Rules parameters of all BSs.	Optional	N/A	1-16777215

Display Format

(for each existing BS if requested for all BSs)

BSIDLSB :<value>

IntraASNDSCP :<value>

IntraASN802.1pPriority :<value>

Command Modes

Global command mode

3.9.17.5.3 Displaying Configuration Information for All Control Traffic QoS Marking Rules Parameters

To display configuration for all Control Traffic QoS Marking Rules parameters, run the following command:

npu# show ctrltrafficqos-all bs [<(1 to 16777215 StepSize 1)

Specify the BS ID if you want to display configuration for a particular BS. For example, to display all Control Traffic QoS Marking Rules parameters of BS 66053, run the following command:

npu# show ctrltrafficqos-all bs 66053

Do not specify this parameter if you want to view configuration information for all existing BSs. To display information for all BSs, run the following command:

npu# show ctrltrafficqos-all bs

Command Syntax

npu# show ctrltrafficqos-all bs [<(1 to 16777215 StepSize 1)

Privilege Level

1

Syntax Description

Parameter	Description	Presence	Default Value	Possible Values
<(1 to 16777215 StepSize 1)>	The BS ID Specify a value for this parameter if you want to display all Control Traffic QoS Marking Rules parameters of a specific BS. Do not specify a value for this parameter if you want to display all Control Traffic QoS Marking Rules parameters of all BSs.	Optional	N/A	1-16777215

Display Format

(for each existing BS if requested for all BSs)

BSIDLSB :<value>

IntraASNDSCP :<value>

IntraASN802.1pPriority :<value>

InternalManagementDSCP :<value>

InternalManagement802.1pPriority :<value>

Command Modes: Global command mode

3.9.18 Managing ID-IP Mapping Parameters

After enabling the BS configuration mode, you can execute the following tasks:

- Configure one or more ID-IP Mapping entry (refer to Section 3.9.18.1).
- Delete one or more ID-IP Mapping entries (refer to Section 3.9.18.2).

You can display configuration information for the ID-IP Mapping of a selected or all existing BSs (refer to Section 3.9.18.3).

3.9.18.1 Configuring ID-IP Mapping Entries

To configure ID-IP Mapping entries:

From the BS configuration mode, run the following command:

npu(config-bs-66053)# idip <(1 to 16777215 StepSize 1)> [nw-node-ip <ip address>]

Command Syntax: **npu(config-bs-66053)# idip** `<(1 to 16777215 StepSize 1)> [nw-node-ip <ip address> ]`

Privilege Level: 10

Syntax Description

Parameter	Description	Presence	Default Value	Possible Values
<(1 to 16777215 StepSize 1)>	The Next Hop (Network Node) BS ID	Mandatory	N/A	1 - 16777215
nw-node-ip <ip address>	The Next Hop (Network Node) BS IP Address	Mandatory	N/A	IP address

Command Modes	bs configuration mode

IMPORTANT

When creating a new BS, at least one ID-IP Mapping entry must be configured.

3.9.18.2 Deleting an ID-IP Mapping Entry

Run the following command from the BS configuration mode to delete an ID-IP Mapping entry:

npu(config-bs 66053)# no idip <(1 to 16777215 StepSize 1)>

Command Syntax	npu(config-bs 66053)# no idip <(1 to 16777215 StepSize 1)>
Privilege Level	10

Syntax Description

Parameter	Description	Presence	Default Value	Possible Values
<(1 to 16777215 StepSize 1)>	The Next Hop (Network Node) BS ID	Mandatory	N/A	1 - 16777215

Command Modes	bs configuration mode

3.9.18.3 Displaying Configuration Information for ID-IP Mapping Entries

To display configuration information of ID-IP Mapping entries, run the following command:

npu# show idip bs [<(1 to 16777215 StepSize 1)> nw-node-id <(1 to 16777215 StepSize 1)>]

Specify the BS ID and Next Hop (Network Node) BS ID (nw-node-id) if you want to display information for a particular ID-IP Mapping entry. For example, to display the ID-IP Mapping of BS 66053 and Network Node 66055, run the following command:

npu# show idip bs 66053 nw-node-id 66055

Do not specify these parameters if you want to view information of ID-IP Mapping entries in all existing BSs. To display information for all BSs, run the following command:

npu# show idip bs

Command Syntax

npu# show idip bs [<(1 to 16777215 StepSize 1)> nw-node-id <(1 to 16777215 StepSize 1)>]

Privilege Level

1

Syntax Description

Parameter	Description	Presence	Default Value	Possible Values
<(1 to 16777215 StepSize 1)>	The BS ID Specify a value for this parameter if you want to display specific ID-IP Mapping entry in a specific BS. Do not specify a value for this parameter if you want to display all ID-IP Mapping entries of all BSs.	Optional	N/A	1-16777215
nw-node-id <(1 to 16777215 StepSize 1)>	The Next Hop (Network Node) BS ID. Specify a value for this parameter if you want to display a specific ID-IP Mapping entry in a specific BS. Do not specify a value for this parameter if you want to display all ID-IP Mapping entries of all BSs.	Optional	N/A	1-16777215

Display Format (for each entry if requested for all)	BSIDLSB	:<value>
	NetworkNodeID	:<value>
	NetworkNodeIPAddress	:<value>

Command Modes	Global command mode

3.9.19 Managing Ranging Parameters

To configure the Ranging parameters:

1. Enable the Ranging configuration mode (refer to Section 3.9.19.1)
2. You can now execute any of the following tasks:
   - Configure the Ranging General parameters (refer to Section 3.9.19.2)
   - Restore the default values of one or more of the Ranging General parameters (refer to Section 3.9.19.3)
   - Terminate the Ranging configuration mode (refer to Section 3.9.19.4)

In addition, you can, at any time, display configuration information for the Ranging General parameters (refer to Section 3.9.19.5).

3.9.19.1 Enabling the Ranging Configuration Mode

To configure the Ranging parameters, first enable the Ranging configuration mode. Run the following command to enable the Ranging configuration mode.

npu(config-bs-66053)# ranging

The Ranging configuration mode is enabled, after which you can execute any of the following tasks:

- Configure one or more of the Ranging General parameters (refer to Section 3.9.19.2)
- Restore the default values of one or more of the Ranging General parameters (refer to Section 3.9.19.3)

After executing the above tasks, you can terminate the Ranging configuration mode (refer to Section 3.9.19.4) and return to the BS configuration mode.

Command Syntax	`npu(config-bs-66053)# ranging`
Privilege Level	10

Command Modes

bs configuration mode

3.9.19.2 Configuring Ranging Parameters

To configure the Ranging General parameters, run the following command:

npu(config-bs-66053-ranging)# general [start-of-rng-codes <(0 to 255 StepSize 1)>] [max-cellradius {one | two | four | eight | fifteen | twentyThree | thirty}]

Command Syntax

npu(config-bs-66053-ranging)# `general [start-of-rng-codes <(0 to 255 StepSize 1)> ] [max-cellradius {one | two | four | eight | fifteen | twentyThree | thirty} ]`

Privilege Level

10

Syntax Description

Parameter	Description	Presence	Default Value	Possible Values
start-of-rng-codes <(0 to 255 StepSize 1)>	Start of Ranging Codes: The starting number S of the group of codes used for this uplink. Actual valid values are 0, 64, 128, 192. If a different value is configured-the highest valid value that is lower than the configured value will be set (for example, for a configured value of 140 the actual value will be 128).	Optional	0	0 - 255

max-cellradius {one | two | four | eight | fifteen | twentyThree | thirty}	The Maximum Cell Radius (in km)	Optional	two	■ one ■ two ■ four ■ eight ■ fifteen ■ twentyThree ■ thirty

Command Modes

bs ranging configuration mode

3.9.19.3 Restoring Default Values for Ranging Configuration Parameters

To restore one or all of the Ranging General parameters to their default values, run the following command:

npu(config-bs-66053-ranging)# no general [start-of-rng-codes] [max-cellradius]

You can restore only one parameter to its default values by specifying only this parameter. For example, to restore only max-cellradius to the default value, run the following command:

npu(config-bs-66053-ranging)# no general max-cellradius

The parameter will be restored to its default value, while the other parameter will remain unchanged.

To restore all Ranging General parameters to their default value, run the following command:

npu(config-bs-66053-ranging)# no general

NOTE

Refer to Section 3.9.19.2 for a description and default values of these parameters.

Command Syntax

npu(config-bs-66053-ranging)# no general `[start-of-rng-codes ] [max-cellradius ]`

Privilege Level	10
Command Modes	bs ranging configuration mode

3.9.19.4 Terminating the Ranging Configuration Mode

Run the following command to terminate the Ranging configuration mode:

npu(config-bs-66053-ranging)# exit

IMPORTANT

If you did not configure any of the BS General parameters, do not forget to execute the apply command before terminating the Ranging configuration mode:
npu(config-bs-66053-ranging)# apply

Command Syntax	npu(config-bs-66053-ranging)# exit
Privilege Level	10
Command Modes	bs ranging configuration mode

3.9.19.5 Displaying Configuration Information for Ranging Parameters

To display configuration for the Ranging General parameters, run the following command:

npu# show ranging-general bs [<(1 to 16777215 StepSize 1)

Specify the BS ID if you want to display configuration for a particular BS. For example, to display the Ranging General parameters of BS 66053, run the following command:

npu# show ranging-general bs 66053

Do not specify this parameter if you want to view configuration information for all existing BSs. To display information for all BSs, run the following command:

npu# show ranging-general bs

Command Syntax

npu# show ranging-general bs [<(1 to 16777215 StepSize 1)

Privilege Level

1

Syntax Description

Parameter	Description	Presence	Default Value	Possible Values
<(1 to 16777215 StepSize 1)>	The BS ID Specify a value for this parameter if you want to display the Ranging General parameters of a specific BS. Do not specify a value for this parameter if you want to display the Ranging General parameters of all BSs.	Optional	N/A	1-16777215

Display Format

(for each existing BS if requested for all BSs)

BSIDLSB :<value>

StartofRangingCodes :<value>

MaximumCellRadius(km) :<value>

Command Modes

Global command mode

3.9.20 Managing Alarm Threshold Parameters

After enabling the BS configuration mode, you can execute the following tasks:

- Configure one or more of the Alarm Threshold parameters (refer to Section 3.9.20.1).
- Restore the default values of some or all of the Alarm Threshold parameters (refer to Section 3.9.20.2).

You can display configuration and status information for the Alarm Threshold parameters of a selected or all existing BSs (refer to Section 3.9.20.3).

3.9.20.1 Configuring Alarm Threshold Parameters

To configure the Alarm Threshold parameters:

From the BS configuration mode, run the following command:

npu(config-bs-66053)# alrm-thrshld [ul-mednoise <(-135 to -100 StepSize 1)>] [ul-99prcntnoise <(-135 to -100 StepSize 1)>] [Be-exc-dl-drop-thr <(1 to 1000 StepSize 1)>] [rt-exc-dl-drop-thr <(1 to 1000 StepSize 1)>] [nrt-exc-dl-drop-thr <(1 to 1000 StepSize 1)>] [ugs-exc-dl-drop-thr <(1 to 1000 StepSize 1)>] [ert-exc-dl-drop-thr <(1 to 1000 StepSize 1)>]

Command Syntax

npu(config-bs-66053)# `alrm-thrshld [ul-mednoise <(-135 to -100 StepSize 1)>] [ul-99prcntnoise <(-135 to -100 StepSize 1)>] [Be-exc-dl-drop-thr <(1 to 1000 StepSize 1)>] [rt-exc-dl-drop-thr <(1 to 1000 StepSize 1)>] [nrt-exc-dl-drop-thr <(1 to 1000 StepSize 1)>] [ugs-exc-dl-drop-thr <(1 to 1000 StepSize 1)>] [ert-exc-dl-drop-thr <(1 to 1000 StepSize 1)>]`

Privilege Level

10

Syntax Description

Parameter	Description	Presence	Default Value	Possible Values

ul-mednoise <(-135 to -100 StepSize 1)>	The uplink median noise level represents the median value of the noise floor histogram. If the uplink median noise level exceeds this value, an excessive uplink median noise alarm will be generated. The value is in dBm/tone. The default value is set to 3 dB above the default value of the target noise and interference level for the PUSC zone (target-ni parameter, see Section 3.9.4.2.1)	Optional	-124	-135 to -100
ul-99prcntnoise <(-135 to -100 StepSize 1)>	The uplink 99% noise level represents the 99% value of the noise floor histogram. If the uplink 99% noise level exceeds this value, an excessive uplink 99% percentile noise alarm will be generated.	Optional	-100	-135 to -100
`[Be-exc-dl-drop-thr <(1 to 1000 StepSize 1)> ]`	Threshold for Excessive DL Dropped Packets Ratio for Best Effort (in promils)	Optional	1000	1 - 1000
`[rt-exc-dl-drop-thr <(1 to 1000 StepSize 1)> ]`	Threshold for Excessive DL Dropped Packets Ratio for Real Time (in promils)	Optional	1000	1 - 1000
`[nrt-exc-dl-drop-thr <(1 to 1000 StepSize 1)> ]`	Threshold for Excessive DL Dropped Packets Ratio for Non Real Time (in promils)	Optional	1000	1 - 1000
`[ugs-exc-dl-drop-thr <(1 to 1000 StepSize 1)> ]`	Threshold for Excessive DL Dropped Packets Ratio for UGS (in promils)	Optional	1000	1 - 1000

[ert-exc-dl-drop-thr <(1 to 1000 StepSize 1)>]	Threshold for Excessive DL Dropped Packets Ratio for ERT (in promils)	Optional	1000	1 - 1000

Command Modes: bs configuration mode

3.9.20.2 Restoring the Default Values of Alarm Threshold Parametes

To restore the default values of some or all of the Alarm Threshold parameters, run the following command:

npu(config-bs-66053)# no alrm-thrshld [ul-mednoise] [ul-99prcntnoise] [Be-exc-dl-drop-thr] [rt-exc-dl-drop-thr] [nrt-exc-dl-drop-thr] [ugs-exc-dl-drop-thr] [ert-exc-dl-drop-thr]

You can restore only some parameters to the default values by specifying only those parameter. For example, to restore only the ul-mednoise parameter to the default value, run the following command:

npu(config-bs-66053)# no alrm-thrshld ul-mednoise

This parameter will be restored to its default value, while the other parameters will remain unchanged.

To restore all Alarm Threshold parameters to their default value, run the following command:

npu(config-bs-66053)# no alrm-thrshld

NOTE

Refer to Section 3.9.20.1 for a description and default values of these parameters.

Command Syntax: **npu(config-bs-66053)# no alrm-thrshld** [ul-mednoise] [ul-99prcntnoise] [Be-exc-dl-drop-thr] [rt-exc-dl-drop-thr] [nrt-exc-dl-drop-thr] [ugs-exc-dl-drop-thr] [ert-exc-dl-drop-thr]

Privilege Level: 10

Command Modes: bs configuration mode

3.9.20.3 Displaying Configuration Information for Alarm Threshold Parameters

To display configuration information of Alarm Threshold parameters, run the following command:

npu# show alrm-thrshld bs [<(1 to 16777215 StepSize 1)

Specify the BS ID if you want to display information for a particular BS. For example, to display the Alarm Threshold parameters of BS 66053, run the following command:

npu# show alrm-thrshld bs 66053

Do not specify this parameter if you want to view information for all existing BSs. To display information for all BSs, run the following command:

npu# show alrm-thrshld bs

Command Syntax

npu# show alrm-thrshld bs [<(1 to 16777215 StepSize 1)

Privilege Level

1

Syntax Description

Parameter	Description	Presence	Default Value	Possible Values
<(1 to 16777215 StepSize 1)>	The BS ID Specify a value for this parameter if you want to display Alarm Threshold parameters of a specific BS. Do not specify a value for this parameter if you want to display Alarm Threshold parameters of all BSs.	Optional	N/A	1-16777215

Display Format (for each existing BS if requested for all BSs)	BSIDLSB :<value> UplinkMedNoise Uplink99%Noise(dBm) :<value> ThresholdforExcessiveDLDroppedPacketsRatioBestEffort:<value> ThresholdforExcessiveDLDroppedPacketsRatioRealTime:<value> ThresholdforExcessiveDLDroppedPacketsRatioNonRealTime:<value> ThresholdforExcessiveDLDroppedPacketsRatioUgs :<value> ThresholdforExcessiveDLDroppedPacketsRatioErt :<value>
Command Modes	Global command mode

3.9.21 Managing BS Reserved Parameters

NOTE

The BS reserved parameters table enables configuring up to 21 parameters that are reserved for possible future use. In the current release none of the reserved parameters is being used. Therefore, the following commands are not applicable:

- Configure reserved parameters: npu (config-bs-<N>)# bs-reserved [reserved-1 <string (32)>] [reserved-2 <string (32)>] [reserved-3 <string (32)>] [reserved-4 <string (32)>] [reserved-5 <string (32)>] [reserved-6 <string (32)>] [reserved-7 <string (32)>] [reserved-8 <string (32)>] [reserved-9 <string (32)>] [reserved-10 <string (32)>] [reserved-11 <string (32)>] [reserved-12 <string (32)>] [reserved-13 <string (32)>] [reserved-14 <string (32)>] [reserved-15 <string (32)>] [reserved-16 <string (32)>] [reserved-17 <string (32)>] [reserved-18 <string (32)>] [reserved-19 <string (32)>] [reserved-20 <string (32)>] [reserved-21 <string (32)>].
- Restore default values of reserved parameters: npu(config-bs-<N>)# no bs-reserved [reserved-1] [reserved-2] [reserved-3] [reserved-4] [reserved-5] [reserved-6] [reserved-7] [reserved-8] [reserved-9] [reserved-10] [reserved-11] [reserved-12] [reserved-13] [reserved-14] [reserved-15] [reserved-16] [reserved-17] [reserved-18] [reserved-19] [reserved-20] [reserved-21].
- Display configured values of reserved parameters: npu# show bs-reserved bs [<(1 to 16777215 StepSize 1).

3.9.22 Managing the BS Keep-Alive Functionality

Once an MS enters the network, its context is stored in ASN entities (BS, ASN-GW). Dynamically, MS context could be transferred/updated (during HO and re-authentication) to other entities or duplicated to other entities (separation between anchor functions such as Authenticator, Data Path and Relay Data Path).

In certain cases, such as entity reset, other entities are not aware of service termination of an MS in that entity, and keep maintaining the MS context. This may result in service failure, excessive consumption of memory resources and accounting mistakes.

The keep-alive mechanism should be used to clear MS context from all network entities when it is de-attached from the BS, and de-register MS from the network when its context becomes unavailable in one of its serving function locations.

When the keep-alive mechanism is enabled the BS periodically polls other ASN-GW entities-of-interest and waits for their responses. In case of no keep-alive response, the BS shall make further actions, such as graceful de-registration of applicable MS(s) and clearing the applicable MS(s) context.

The BS builds a list of ASN-GW-of-Interest, which it must poll. The list is dynamically updated; when a new MS is attached to the BS, or MS performs CSN mobility (data-path relocation) and in its context there is an ASN-GW identifier unknown to this BS, it shall add it to the ASN-GW-of-interest list. When the last MS(s) with specific ASN-GW identifier exits the network, the BS shall remove the ASN-GW from the list. The BS shall include in the ASN-GW-of-interest list also Relay Data-path ASN-GW(s) (UL next hop IP address). This is applicable when hierarchical data-path establishment takes place during inter-ASN HO.

The BS periodically polls the ASN-GW(s) for keep-alive. The polling mechanism is independent and unrelated for every ASN-GW-of-interest the BS polls.

The keep-alive mechanism uses configurable retry timer and retries counter. Upon expiration of the retry timer, the BS resends the BS Keep-Alive request message. Upon expiration of the retries counter, the BS assumes failure of the polled ASN-GW and clears the contexts of all MS(s) served by that ASN-GW.

In addition, the BS verifies that for each polled entity that the “Last-Reset-Time” UTC value of poll N+1 is equal to the value of poll N. If the “Last-Reset-Time” UTC value of poll N+1 is higher than the value of poll N, this mean that the ASN-GW went through reset state during the interval between two consecutive polls. In this case, the BS shall de-register all MS(s) served by that specific ASN-GW and clear their contexts.

When keep-alive fails, the BS generates an alarm and log the event.

Regardless of the enable/disable status of the keep-alive mechanism in the BS, it replies to BS_Keep_Alive_Req received from ASN-GWs with BS_Keep_Alive_Rsp. that includes also its “Last-Reset-Time”. It responds only if all its functions operate properly. In case one of the functions fails, the BS shall not respond to the keep-alive poll.

3.9.22.1 Configuring BS Keep-Alive Parameters

To configure one or several keep-alive parameters, run the following command:

npu(config-bs-66053)# keep-alive [**asn-ka** {enable | disable}] [**period** <(10 to 1000 StepSize 1)>] [**rtx-cnt** <(0 to 10 StepSize 1)>] [**rtx-time** <(5000 to 10000 StepSize 1)>]

IMPORTANT

An error may occur if you provide an invalid value for any of these parameters. Refer to the syntax description for more information about the appropriate values and format for configuring these parameters.

An error may occur if you provide configuration values that do not satisfy following condition: 'period*1000 >= rtx-time * (rtx-cnt + 1)'"

At least one parameter must be specified (the value is optional): The command npu(config-bs-66053)# keep-alive will return an Incomplete Command error.

Command Syntax

npu(config-bs-66053)# keep-alive [asn-ka {enable | disable}] [period <(10 to 1000 StepSize 1)>] [rtx-cnt <(0 to 10 StepSize 1)>] [rtx-time <(5000 to 10000 StepSize 1)>]

Privilege Level

10

Syntax Description

Parameter	Description	Presence	Default Value	Possible Values
[asn-ka {enable | disable}]	Enable/Disable the BS keep-alive mechanism.	Optional	disable	■ enable ■ disable
[period <(10 to 1000 StepSize 1)>]	The period in seconds between polling sessions. period x 1000 (value in milliseconds) cannot be lower than (rtx-cnt) x rtx-time+1).	Optional	60	10-1000
[rtx-cnt <(0 to 10 StepSize 1)>]	Maximum number of retries if rtx-time has expired without getting a response.	Optional	5	0-10

[rtx-time <(5000 to 10000 StepSize 1)>]	Time in milliseconds to wait for a response before initiating another polling attempt or reaching a decision that the polled entity has failed (if the maximum number of retries set by rtx-cnt has been reached).	Optional	5000	5000-10000

Command Modes

bs configuration mode

3.9.22.2 Displaying Configuration Information for BS Keep-Alive Parameters

To display the BS keep-alive parameters, run the following command:

npu# show keep-alive bs [<(1 to 16777215 StepSize 1)

Command Syntax

npu# show keep-alive bs (<(1 to 16777215 StepSize 1)

Privilege Level

1

Syntax Description

Parameter	Description	Presence	Default Value	Possible Values
<(1 to 16777215 StepSize 1)>	The BS ID Specify a value for this parameter if you want to display the Keep-Alive parameters of a specific BS. Do not specify a value for this parameter if you want to display the Keep-Alive parameters of all BSs.	Optional	N/A	1-16777215

Display Format	BSIDLSB Keep Alive Configuration ASN-KA : <enable/disable> Period (sec) : <value> Retransmissions Count : <value> Retransmission Time : <value>
Command Modes	Global command mode

3.9.23 Managing the BS Idle Mode Parameters

The single sector Idle Mode capability provides the benefits of MS power savings and manageable total sector active and non active users, together with reduced overhead on the backhaul network.

Idle Mode (IM) mechanism allows an MS to become unavailable on the air interface, and thus freeing operational resources and preserving MS power. During IM operation, an MS switch off its transmission and reception capabilities, and becomes available for DL broadcast control messaging, i.e., MS Paging, in a periodically manner. Using paging broadcast, BS can indicate (if necessary) the MS to exit from IM and return into normal operation mode. The paging control message is sent over the DL of a set of BSs simultaneously. This set is called Paging group (PG). In the current release, each Paging Group includes a single BS.

During IM, MS performs location updates when moving from one PG to another. While in the same PG, MS does not need to transmit in the UL and can be paged in the DL if there is traffic targeted at it.

After enabling the BS configuration mode, you can configure the Idle Mode parameter (refer to Section 3.9.23.1).

You can display configuration information for the Idle Mode parameter of a selected or all existing BSs (refer to Section 3.9.23.2).

3.9.23.1 Configuring the BS Idle Mode Parameter

To configure the BS Idle Mode Parameter:

From the BS configuration mode, run the following command:

npu(config-bs-66053)# idle-mode [paging-group-id <(0 to 65535 StepSize 1)>]

Command Syntax

```
npu(config-bs-66053)# idle-mode [paging-group-id <(0 to 65535 StepSize 1)>]
```

Privilege Level

10

Syntax Description

Parameter	Description	Presence	Default Value	Possible Values
[paging-group-id <(0 to 65535 StepSize 1)>]	The Paging Group ID of the BS. 0 means that Idle Mode is disabled. If other than 0 (disable), should be unique in the network (different paging-group for each BS).	Mandatory	0	0 to 65535

Command Modes

bs configuration mode

3.9.23.2 Displaying Configuration Information for the BS Idle Mode Parameter

To display configuration information of the BS Idle Mode parameter of a specific or all BSs, run the following command:

npu# show idle-mode bs [<(1 to 16777215 StepSize 1)>]

Specify the BS ID (1-16777215) of an existing BS if you want to display configuration information for a particular BS. Do not specify values for this parameter if you want to view configuration information for all existing BSs.

Command Syntax

npu# show idle-mode bs [<(1 to 16777215 StepSize 1)>]

Privilege Level

1

Syntax Description

Parameter	Description	Presence	Default Value	Possible Values
[<(1 to 16777215 StepSize 1)>]	The BS ID Specify a value for this parameter if you want to display the Idle Mode Paging Group ID Parameter of a specific BS. Do not specify a value for this parameter if you want to display the Idle Mode Paging Group ID Parameter of all BSs.	Optional	N/A	1-16777215

Display Format

(for each existing BS if requested for all BSs)

BSIDLSB :<value>

PagingGrpId :<value>

Command Modes

Global command mode

3.9.24 Managing Scheduler Parameters

Scheduling uncommitted traffic (above the maximum reserved rate) can be done using one of the following options:

- Equal Time (ET) scheduling mode, in which air resources are being scheduled in a fair manner proportional to the users' excess traffic (maximum sustained rate - maximum reserved rate) SLAs.
- Equal Rate (ER) scheduling mode, in which air resources are allocated to users aiming at ensuring data rate fairness between users proportional to their excess traffic SLAs.

Assuming a sector with diversity (different channels conditions) of active users, ET scheme enables higher aggregate sector throughput at the expense of data-rate

fairness among users, while ER scheduling scheme ensures maximum data-rate fairness among users at the expense of lower aggregate sector throughput.

Using ER scheduling scheme exposes the system to excessive allocation of air resources to highly active users having relatively poorer channel conditions. To ensure data-rate fairness, more resources will to be allocated to these users compared to users with relatively good channel conditions. The effect of a small number of such users within the sector will be reflected by reduced aggregate sector throughput as well as degradation of achievable rates for all users.

To protect against “abusing” users, an instantaneous rate threshold can be defined within the scheduling scheme in which the amount of air resources for users with continuous instantaneous rate below the threshold is being limited. The more the abusing users' instantaneous rate is below the threshold, the more resource allocations limitation is applied.

Three levels of dynamic protection are available:

- No protection.
- Low protection level - protection against users with very poor channel conditions. Should be used where the abusing users instantaneous rates are far below the average instantaneous rate within the sector.
- Medium protection - protection against users with relatively poor or very poor channel conditions. Should be used where the abusing users instantaneous rates are below or far below the average instantaneous rate within sector.

A dynamic protection mechanism is implemented, in which the mechanism of limiting resource allocations is automatically and dynamically activated when needed.

After enabling the BS configuration mode, you can execute the following tasks:

- Configure one or more of the Scheduler parameters (refer to Section 3.9.24.1).
- Restore the default values of some or all of the Scheduler parameters (refer to Section 3.9.24.2).

You can display configuration and status information for the Scheduler parameters of a selected or all existing BSs (refer to Section 3.9.24.3).

3.9.24.1 Configuring Scheduler Parameters

To configure the Scheduler parameters:

From the BS configuration mode, run the following command:

npu(config-bs-66053)# scheduler [scheduler-mode {equalRate | equalTime}] [dl-abuse-protection-level {none | low | medium}] [ul-abuse-protection-level {none | low | medium}]

To apply the changes, run the following command:
npu(config-bs-66053)# scheduler-apply

Command Syntax

npu(config-bs-66053)# `scheduler [scheduler-mode {equalRate | equalTime} ] [dl-abuse-protection-level {none | low | medium} ] [ul-abuse-protection-level {none | low | medium} ]`

Privilege Level

10

Syntax Description

Parameter	Description	Presence	Default Value	Possible Values
`scheduler-mode {equalRate | equalTime} ]`	The scheduling scheme for uncommitted data.	Optional	equalRate	■ equalRate ■ equalTime
`dl-abuse-protection-level {none | low | medium}`	The protection level for the downlink for equalRate scheduling mode.	Optional	none	■ none ■ low ■ medium
`ul-abuse-protection-level {none | low | medium}`	The protection level for the uplink for equalRate scheduling mode.	Optional	none	■ none ■ low ■ medium

Command Modes

bs configuration mode

3.9.24.2 Restoring the Default Values of Scheduler Parameters

To restore the default values of some or all of the Scheduler parameters, run the following command:

npu(config-bs-66053)# no scheduler [scheduler-mode] [dl-abuse-protection-level] [ul-abuse-protection-level]

You can restore only some parameters to the default values by specifying only those parameter. For example, to restore only the ul-abuse-protection-level parameter to the default value, run the following command:

npu(config-bs-66053)# no scheduler ul-abuse-protection-level

This parameter will be restored to its default value, while the other parameters will remain unchanged.

To restore all parameters to their default value, run the following command:

npu(config-bs-66053)# no scheduler

To apply the changes, run the following command:
npu(config-bs-66053)# scheduler-apply

NOTE

Refer to Section 3.9.24.1 for a description and default values of these parameters.

Command Syntax	**npu(config-bs-66053)# no scheduler** [scheduler-mode] [dl-abuse-protection-level] [ul-abuse-protection-level]
Privilege Level	10
Command Modes	bs configuration mode

3.9.24.3 Displaying Configuration Information for Scheduler Parameters

To display configuration information of Scheduler parameters, run the following command:

npu# show scheduler bs [<(1 to 16777215 StepSize 1)

Specify the BS ID if you want to display information for a particular BS. For example, to display the Scheduler parameters of BS 66053, run the following command:

npu# show scheduler bs 66053

Do not specify this parameter if you want to view information for all existing BSs. To display information for all BSs, run the following command:

npu# show scheduler bs

Command Syntax

npu# show scheduler bs [<(1 to 16777215 StepSize 1)

Privilege Level

1

Syntax Description

Parameter	Description	Presence	Default Value	Possible Values
<(1 to 16777215 StepSize 1)>	The BS ID Specify a value for this parameter if you want to display parameters of a specific BS. Do not specify a value for this parameter if you want to display parameters of all BSs.	Optional	N/A	1-16777215

Display Format

(for each existing BS if requested for all BSs)

BSIDLSB :<value>

scheduler-mode : <equalRate| equalTime>

dl-abuse-protection-level : <none | low | medium>

ul-abuse-protection-level : <none | low | medium>

Command Modes

Global command mode

3.9.25 Managing the BS ASN-GW Load Balancing Parameters

The Load Balancing feature provides a WiMAX operator with the capability to build resilient ASN infrastructure using ASN-GW redundancy. Every BS is provisioned with a list of redundant ASN-GWs (pool). The BS applies round-robin mechanism in order to pick an Authenticator for each MS that performs initial network entry. This should eventually distribute the load between Anchor ASNGWs. Geographical site backup can be achieved by using different priority of ASN-GW pools (Authenticator "metric").

At the unit (NPU) level, up to two pools (with different priorities), each with up to 10 ASN-GWs, can be defined (see "Managing the BTS Load Balancing Parameters" on page 227). Each BS defined in the unit will "inherit" these pools. It should be noted that the ASN-GW defined in the BS as the default authenticator (see "Managing Authentication Relay Parameters" on page 592) will be automatically added to Pool1 that is the higher priority pool (if not included already).

At the BS level, you can enable/disable the use of each of the two pools. Note that if both pools are disabled, or if the enabled pool(s) are empty, the ASN-GW load balancing feature is disabled and only the default authenticator will be used.

This section includes:

- "Enabling the ASN-GW Load Balancing Configuration Mode" (Section 3.9.25.1).
- "Enabling/Disabling an ASN-GW Load Balancing Pool" (Section 3.9.25.2).
- "Restoring the Default Configuration of ASN-GW Load Balancing Pools" (Section 3.9.25.3).
- "Displaying Configuration Information for ASN-GW Load Balancing Pools" (Section 3.9.25.4).

3.9.25.1 Enabling the ASN-GW Load Balancing Configuration Mode

To configure the ASN-GW Load Balancing parameters, first enable the ASN-GW Load Balancing configuration mode. Run the following command to enable the ASN-GW Load Balancing configuration mode.

npu(config-bs-66053)# asNGWLoadBalancing

Command Syntax

```
npu(config-bs-66053)# asNGWLoadBalancing
```

Privilege Level

10

Command Modes

bs configuration mode

3.9.25.2 Enabling/Disabling an ASN-GW Load Balancing Pool

After enabling the ASN-GW Load Balancing configuration mode, run the following command to enable/disable ASN-GW load balancing pools:

npu(config-bs-5-ASNGWLoadBalancing)# asNGWLoadBalancing [asn-gw-pool-1 {enable | disable}] [asn-gw-pool-2 {enable | disable}]

Note: After enabling Pool 1 and/or Pool 2, the AU must be reset to apply the change.

Command Syntax

nnpu(config-bs-5-ASNGWLoadBalancing)# asNGWLoadBalancing [asn-gw-pool-1 {enable | disable}] [asn-gw-pool-2 {enable| disable}]

Privilege Level

10

Syntax Description

Parameter	Description	Presence	Default Value	Possible Values
[asn-gw-pool-1 {enable | disable}]	Enable/disable the use of pool 1	Optional	Enable	■ Enable ■ Disable
[asn-gw-pool-2 {enable | disable}]	Enable/disable the use of pool 2. Pool 2 cannot be enabled if Pool 1 is disabled.	Optional	Enable	■ Enable ■ Disable

Command Modes

bs asn-gw load balancing configuration mode

3.9.25.3 Restoring the Default Configuration of ASN-GW Load Balancing Pools

After enabling the ASN-GW Load Balancing configuration mode, run the following command to restore the default configuration of ASN-GW load balancing pools:

npu(config-bs-5-ASNGWLoadBalancing)# no ASNGWLoadBalancing [asn-gw-pool-1] [asn-gw-pool-2]

Specify a pool to restore the configuration of this pool to the default value (enabled).

Do not specify any pool to restore the configuration of both pools to the default value (enabled).

Command Syntax

npu(config-bs-5-ASNGWLoadBalancing)# no ASNGWLoadBalancing [asn-gw-pool-1] [asn-gw-pool-2]

Privilege Level

10

Syntax Description

Parameter	Description	Presence	Default Value	Possible Values
[asn-gw-pool-1]	Specify pool 1 to return the configuration of this pool to the default value (enabled)	Optional	N/A	asn-gw-pool-1
[asn-gw-pool-2]	Specify pool 2 to return the configuration of this pool to the default value (enabled)	Optional	N/A	asn-gw-pool-2

Command Modes

bs asn-gw load balancing configuration mode

3.9.25.4 Displaying Configuration Information for ASN-GW Load Balancing Pools

To display configuration information of ASN-GW Load Balancing Pool, run the following command:

npu# show ASNGWLoadBalancing bs [<(1 to 16777215 StepSize 1)>]

Specify the BS ID if you want to display information for a particular BS. For example, to display the ASN-GW Load Balancing configuration parameters of BS 66053, run the following command:

npu# show ASNGWLoadBalancing bs 66053

Do not specify this parameter if you want to view information for all existing BSs. To display information for all BSs, run the following command:

npu# show ASNGWLoadBalancing bs

Command Syntax	ASNGWLoadBalancing bs [<(1 to 16777215 StepSize 1)>]
Privilege Level	1
Display Format (for each existing BS if requested for all BSs)	BSIDLSB : <value> ASN-GWPoolPrimary : <enable(1)/disable(2)> ASN-GWPoolSecondary : <enable(1)/disable(2)>
Command Modes	Global command mode

3.9.26 Managing Beam Forming Parameter

The Beam Forming Calibration Attenuator parameter is applicable only if the Downlink Diversity Mode parameter is set to Beam Forming (see "Configuring the Airframe Downlink Diversity Mode Parameter" on page 568).

3.9.26.1 Enabling the Beam Forming Configuration Mode

To enable the Beam Forming Configuration Mode:

From the BS configuration mode, run the following command:

npu(config-bs-66053)# beamform

After enabling the Beam Forming configuration mode, you can execute the following tasks:

- Configure the Beam Forming parameter (refer to Section 3.9.26.2).
- Restore the default values of the Beam Forming parameter (refer to Section 3.9.26.3).

You can display configuration value for the beamforming parameter of a selected or all existing BSs (refer to Section 3.9.26.4).

3.9.26.2 Configuring the Beam Forming Parameter

To configure the Beam Forming parameter:

From the beamforming configuration mode, run the following command:

npu(config-bs-66053-beamform)# beamform [cal-atten {noAttenUsed | lowAtten | highAtten} **]**

Command Syntax

npu(config-bs-66053)# beamform [cal-atten {noAttenUsed | lowAtten | highAtten} **]**

Privilege Level

10

Syntax Description

Parameter	Description	Presence	Default Value	Possible Values
`cal-atten {noAttenUsed | lowAtten | highAtten`	Applicable only in Beam Forming DL Diversity Mode. The calibration attenuation used to help mitigate potential out of band interference to beam forming calibration caused by other base stations.	Optional	lowAtten	■ noAttenUsed ■ lowAtten ■ highAtten

Command Modes

bs beamform configuration mode

3.9.26.3 Restoring the Default Value of the Beam Forming Parameter

To restore the default values of the Beam Forming parameters, run the following command:

npu(config-bs-66053)# no beamform [cal-atten]

Command Syntax	**npu(config-bs-66053)# no beamform [cal-atten]**
Privilege Level	10
Command Modes	bs beamform configuration mode

3.9.26.4 Displaying Configuration Information for Beam Forming Parameter

To display configuration information of the Beam Forming parameters, run the following command:

npu# show beamform bs [<(1 to 16777215 StepSize 1)

Specify the BS ID if you want to display information for a particular BS. For example, to display the Beam Forming parameter of BS 66053, run the following command:

npu# show beamform bs 66053

Do not specify this parameter if you want to view information for all existing BSs. To display information for all BSs, run the following command:

npu# show beamform bs

Command Syntax	npu# show beamform bs [<(1 to 16777215 StepSize 1)
Privilege Level	1

Syntax Description

Parameter	Description	Presence	Default Value	Possible Values
<(1 to 16777215 StepSize 1)>	The BS ID Specify a value for this parameter if you want to display parameters of a specific BS. Do not specify a value for this parameter if you want to display parameters of all BSs.	Optional	N/A	1-16777215

Display Format

(for each existing BS if requested for all BSs)

BSIDLSB :<value>

CalibrationAttenuator :<value>

Command Modes

Global command mode

3.10 Managing Sectors

Up to 6 Sector objects can be created and configured. The Sector's configuration includes the association of all the objects that form a sector, including BS, AU/AU-Port, ODU/ODU-Port and Antenna/Antenna Port.

This section include:

- "Configuring Sector Parameters", Section 3.10.1
- "Configuring Sector Association Entries", Section 3.10.2

3.10.1 Configuring Sector Parameters

To configure Sector Parameters:

1. Enable the Sector Parameters configuration mode for the selected Sector (refer to Section 3.10.1.1)
2. You can now execute any of the following tasks:
   - Configure one or more of the parameters tables of the Sector (refer to Section 3.10.1.2)
   - Restore the default values of parameters in one or more of the parameters tables of the Sector (refer to Section 3.10.1.3)
3. Terminate the Sector Parameters configuration mode (refer to Section 3.10.1.4)

In addition, you can, at any time, display configuration information for each of the parameters tables of the Sector (refer to Section 3.10.1.6) or delete an existing Sector object (refer to Section 3.10.1.5).

3.10.1.1 Enabling the Sector Parameters Configuration Mode\Creating a Sector Object

To configure the parameters of a Sector, first enable the Sector Parameters configuration mode for the specific Sector. Run the following command to enable the Sector Parameters configuration mode for an existing Sector object:

npu (config)# sector-params <(1 to 6 StepSize 1)>

To create a new Sector object, the width parameter must be specified. Run the following command to create a new Sector object and enable the parameters configuration mode for this ODU:

npu (config)# sector-params <(1 to 6 StepSize 1)> [**width** <(0 to 359 StepSize 1)>]

A new Sector object is created with default values for all parameters except to the mandatory width parameter.

IMPORTANT

An error may occur if you provide an invalid value for any of these parameters. Refer the syntax description for more information about the appropriate values and format for configuring these parameters.

For example, to create Sector 1 object and enable the parameters configuration mode for this Sector, where the width is 90 degrees, run the following command:

npu (config)# sector-params 1 width 90

After enabling the Sector Parameters configuration mode for a Sector you can execute any of the following tasks:

- Configure one or more of the parameters tables of the Sector (refer to Section 3.10.1.2)
- Restore the default values of non-mandatory parameters in one or more of the parameters tables of the Sector (refer to Section 3.10.1.3)

After executing the above tasks, you can terminate the Sector Parameters configuration mode (refer to Section 3.10.1.4) and return to the global configuration mode.

Command Syntax

npu (config)# sector-params <(1 to 6 StepSize 1)> [width <(0 to 359 StepSize 1)>]

Privilege Level

10

Syntax Description

Parameter	Description	Presence	Default Value	Possible Values

<(1 to 6 StepSize 1)>	The Sector ID	Mandatory	N/A	1-6
width <(0 to 359 StepSize 1)>	The planned sector coverage, in degrees.	Mandatory when creating a new Sector	N/A	0 - 359

Command Modes: Global configuration mode

NOTE

The following examples are for sector-1 parameters configuration mode.

3.10.1.2 Configuring Sector Parameters

After enabling the Sector Parameters configuration mode you can configure the following parameters tables:

- Sector Definition (refer to Section 3.10.1.2.1)
- Sector Reserved (refer to Section 3.10.1.2.2)

3.10.1.2.1 Configuring Sector Definition Parameters

The Sector Definition table enables configuring the main properties of the Sector.

To configure the Sector Definition parameters, run the following command:

npu(config-sector-params-1)# sector-definition [sector-name <string (32)>] [heading <(0 to 359 StepSize 1)>] [width <(0 to 359 StepSize 1)>]

IMPORTANT

An error may occur if you provide an invalid value for any of these parameters. Refer the syntax description for more information about the appropriate values and format for configuring these parameters.

Command Syntax: **npu(config-sector-params-1)# sector-definition** `[sector-name <string (32)> ] [heading <(0 to 359 StepSize 1)> ] [width <(0 to 359 StepSize 1)> ]`

Privilege Level: 10

Syntax Description

Parameter	Description	Presence	Default Value	Possible Values
sector-name <string (32)>	The sector name (description). Must be unique in the site (shelf).	Optional	null (empty string)	A string of up to 32 characters
heading <(0 to 359 StepSize 1)>	The sector heading (The center angle of the sector), in degrees.	Optional	0	0 - 359
width <(0 to 359 StepSize 1)>	The planned sector coverage, in degrees.	Optional	Configured previously during sector creation.	0 - 359

Command Modes

sector-params configuration mode

3.10.1.2.2 Configuring Sector Reserved Parameters

As the name implies, the reserved parameters table enables configuring up to 4 parameters that are reserved for possible future use. In the current release none of the reserved parameters is being used.

To configure the Sector Reserved parameters, run the following command:

```
npu(config-sector-params-1)# sector-reserved [reserved-1 <string (32)>] [reserved-2 <string (32)>] [reserved-3 <string (32)>] [reserved-4 <string (32)>].
```

Command Syntax

```
npu (config-sector-params-1)# sector-reserved [reserved-1 <string (32)>] [reserved-2 <string (32)>] [reserved-3 <string (32)>] [reserved-4 <string (32)>]
```

Privilege Level

10

Syntax Description

Parameter	Description	Presence	Default Value	Possible Values
[reserved-N<string (32)>] (N=1-4)	Reserved parameter number N	Optional	null (an empty string)	A string of 32 printable characters.

Command Modes

sector-params configuration mode

3.10.1.3 Restoring Default Values for Sector Configuration Parameters

After enabling the Sector Parameters configuration mode you can restore the default values for parameters in the following parameters tables:

- Sector Definition (refer to Section 3.10.1.3.1)
- Sector Reserved (refer to Section 3.10.1.3.2)

3.10.1.3.1 Restoring the Default Values of Sector Definition Parameters

To restore the one or all of the non-mandatory parameters to the default values, run the following command:

npu(config-sector-params-1)# no sector-definition [sector-name] [heading]

Run the following command to restore the sector definition parameters to the default values:

npu(config-sector-params-1)# no sector-definition

NOTE

Refer to Section 3.10.1.2.1 for a description and default values of these parameter.

Command Syntax

npu(config-sector-params-1)# no sector-definition `[sector-name] [heading]`

Privilege Level

10

Command Modes	sector-params configuration mode

3.10.1.3.2 Restoring the Default Values of Sector Reserved Parameters

To restore Sector Reserved parameters to their default value, run the following command:

npu(config-sector-params-1)# no sector-reserved [reserved-1] [reserved-2] [reserved-3] [reserved-4]

You can restore only selected parameters to their default value by specifying only those parameter. For example, to restore only the reserved-1 parameter to its default values, run the following command:

npu(config-sector-params-1)# no sector-reserved reserved-1

This parameter will be restored to the default value, while the other parameters will remain unchanged.

To restore all parameters to their default value, run the following command:

npu(config-sector-params-1)# no sector-reserved

NOTE

Refer to Section 3.10.1.2.2 for a description and default values of these parameters.

Command Syntax	**npu(config-sector-params-1)# no sector-reserved** [reserved-1] [reserved-2] [reserved-3] [reserved-4]
Privilege Level	10
Command Modes	sector-params configuration mode

3.10.1.4 Terminating the Sector Parameters Configuration Mode

Run the following command to terminate the Sector Parameters configuration mode:

npu(config-sector-params-1)# exit

Command Syntax	npu(config-sector-params-1)# exit
Privilege Level	10
Command Modes	sector-params configuration mode

3.10.1.5 Deleting a Sector Object

Run the following command to delete a Sector object:

npu(config)# no sector-params <(1 to 6 StepSize 1)>

IMPORTANT

An associated Sector (specified in a Sector Association) cannot be deleted.

Command Syntax	**npu(config)# no sector-params** <(1 to 6 StepSize 1)>
Privilege Level	10

Syntax Description

Parameter	Description	Presence	Default Value	Possible Values
<(1 to 6 StepSize 1)>	The Sector ID	Mandatory	N/A	1-6

Command Modes	Global configuration mode

3.10.1.6 Displaying Configuration Information for Sector Parameters

You can display the current configuration and (where applicable) additional status information for the following parameters tables:

- Sector Definition (refer to Section 3.10.1.6.1)

- Sector Reserved (refer to Section 3.10.1.6.2)

3.10.1.6.1 Displaying Configuration Information for Sector Definition Parameters

To display configuration information for the Sector Definition parameters of a specific or all Sector objects, run the following command:

npu# show sector-definition [sector-id <(1 to 6 StepSize 1)>]

Specify the Sector ID (1-6) if you want to display configuration information for a particular Sector. Do not specify a value for this parameter if you want to view configuration information for all existing Sector objects.

Command Syntax

npu# show sector-definition [sector-id <(1 to 6 StepSize 1)>]

Privilege Level

1

Syntax Description

Parameter	Description	Presence	Default Value	Possible Values
sector-id <(1 to 6 StepSize 1)>	The Sector ID Specify a value for this parameter if you want to display the Sector Definition parameters of a specific Sector. Do not specify a value for this parameter if you want to display the parameters of all Sectors.	Optional	N/A	1-6

Display Format

(for each existing ODU object if requested for all ODUs)

SectorID :<value>

SectorName :<value>

SectorHeading(degrees) :<value>

SectorWidth(degrees) :<value>

Command Modes

Global command mode

3.10.1.6.2 Displaying Configuration Information for Sector Reserved Parameters

To display configuration information for the reserved parameters of a specific or all Sector objects, run the following command:

npu# show sector-reserved [sector-id <(1 to 6 StepSize 1)>]

Specify the Sector ID (1-6) if you want to display configuration for a particular Sector. Do not specify a value for this parameter if you want to view configuration for all existing Sector objects.

Command Syntax

npu# show sector-reserved [sector-id <(1 to 6 StepSize 1)>]

Privilege Level

1

Syntax Description

Parameter	Description	Presence	Default Value	Possible Values
<(1 to 6 StepSize 1)>	The Sector ID. Specify a value for this parameter if you want to display the reserved parameters of a specific Sector. Do not specify a value for this parameter if you want to display the reserved parameters of all Sectors.	Optional	N/A	1-6

Display Format

(for each existing ODU object if requested for all ODUs)

SectorID :<value>

ReservedParameter1 :<value>

ReservedParameter2 :<value>

ReservedParameter3 :<value>

ReservedParameter4 :<value>

Command Modes	Global command mode

3.10.2 Configuring Sector Association Entries

The Sector Association entry defines all the components that together form a Sector. Because of the unique functionality of Sector Association entries, they can only be created: An existing Sector Association entry cannot be modified (to modify an entry, it must first be deleted and then created again with the modified values). For details on creating a new Sector Association entry, refer to Section 3.10.2.1.

You can, at any time, display configuration information for each or all of the Sector Association entries (refer to Section 3.10.2.3) or delete an existing Sector Association entry (refer to Section 3.10.2.2).

3.10.2.1 Creating a Sector Association Entry

A Sector Association entry is identified by the BS ID, AU Slot ID and AU Port Number.

To create a new Sector Association entry, all the entry's parameters must be specified. Run the following command to create a new Sector Association entry:

npu (config)# sector-assoc <(1 to 16777215 StepSize 1)> <(1 to 4 StepSize 1) | (7 to 9 StepSize 1)> <(1 to 4 StepSize 1)> sector-id <(1 to 6 StepSize 1)> odu-no <(1 to 28 StepSize 1)> odu-port-no <1 to 4 StepSize 1> antenna-no <(1 to 28 StepSize 1)> antenna-port-no <1 to 8 StepSize 1>

A new Sector Association entry is created with the specified values. For example, to create a Sector Association entry identified by BS ID 66053, AU Slot No. 2 and AU Port No. and with association to Sector ID 3, ODU No. 4, Antenna No. 5, ODU Port No. 1 and Antenna Port No. 1, run the following command:

npu (config)# sector-assoc 66053 2 1 sector-id 3 odu-no 4 odu-port-no 1 antenna-no 5 antenna-port-no 1

Command Syntax	**npu (config)# sector-assoc** <(1 to 16777215 StepSize 1)> <(1 to 4 StepSize 1) | (7 to 9 StepSize 1)> <(1 to 4 StepSize 1)> sector-id <(1 to 6 StepSize 1)> odu-no <(1 to 28 StepSize 1)> odu-port-no <1 to 4 StepSize 1> antenna-no <(1 to 28 StepSize 1)> antenna-port-no <1 to 8 StepSize 1>
Privilege Level	10

Syntax Description

Parameter	Description	Presence	Default Value	Possible Values
<(1 to 16777215 StepSize 1)>	BS ID (bs-id-lsb)	Mandatory	N/A	1-16777215
<(1 to 4 StepSize 1) | (7 to 9 StepSize 1)>	AU Slot ID	Mandatory	N/A	1-4, 7-9
<(1 to 4 StepSize 1)>	AU Port Number	Mandatory	N/A	1-4
sector-id <(1 to 6 StepSize 1)>	Sector ID	Mandatory	N/A	1-6
odu-no <(1 to 28 StepSize 1)>	ODU Number	Mandatory	N/A	1-28
odu-port-no <1 to 4 StepSize 1>	ODU Port Number	Mandatory	N/A	1-4
antenna-no <(1 to 28 StepSize 1)>	Antenna Number	Mandatory	N/A	1-28
antenna-port-no <1 to 8 StepSize 1>	Antenna Port Number	Mandatory	N/A	1-4

Command Modes

Global configuration mode

Creation of a new Sector Association entry will succeed only if all the following conditions are met:

- The specified BS object exists and is properly configured (see also Section 3.9):
  - All mandatory parameters have been configured properly.
  - The configured frequency is within the valid range defined by the required ODU type in the specified ODU object and the bandwidth parameter.
  - The Operator ID is the same as Operator ID configured for previously associated BSs.
  - In all tables that includes only non-mandatory parameters at least one parameter has been configured.
  - Wherever needed, the apply command has been executed.

- The specified AU object exists (see Section 3.6).
- The specified ODU object exists (the mandatory parameters required-type and txpower for port 1 have been configured). The configured txpower is within the valid range for the required ODU type (see Section 3.7).
- The Antenna object exists (the mandatory heading parameter has been configured). The specified Antenna Port No. is within the range defined by the no-of-ports parameter (see Section 3.8).
- The Sector object exists (mandatory width parameter have been configured). The defined sector-name is unique in the site (shelf).
- An ODU Port (combination of ODU No. and ODU Port No.) cannot appear in more than one entry.
- An AU Port (combination of AU Slot No. and AU Port No.) cannot appear in more than one entry.
- An Antenna Port (combination of Antenna No. and Antenna Port No.) cannot appear in more than one entry.
- A specific Antenna can only be associated with a single Sector.
- In the current release, a specific BS can only be associated with a single AU, and vice versa (If BS 66053 is associated with AU 1, BS 66053 cannot be associated with another AU, and AU 1 cannot be associated with another BS).
- Two ODUs associated with the same AU (for Beam Forming support) must be in the same frequency band. This is applicable for 2x2 and 4x2 ODUs that support Beam Forming.

3.10.2.2 Deleting a Sector Association Entry

Run the following command to delete a Sector Association entry:

npu (config)# no sector-assoc <(1 to 16777215 StepSize 1)> <(1 to 4 StepSize 1) | (7 to 9 StepSize 1)> <(1 to 4 StepSize 1)>

Command Syntax	**npu (config)# no sector-assoc** <(1 to 16777215 StepSize 1)> <(1 to 4 StepSize 1) | (7 to 9 StepSize 1)> <(1 to 4 StepSize 1)>

Privilege Level: 10

Syntax Description

Parameter	Description	Presence	Default Value	Possible Values
<(1 to 16777215 StepSize 1)>	BS ID (bs-id-lsb)	Mandatory	N/A	1-16777215
<(1 to 4 StepSize 1) | (7 to 9 StepSize 1)>	AU Slot ID	Mandatory	N/A	1-4, 7-9
<(1 to 4 StepSize 1)>	AU Port Number	Mandatory	N/A	1-4

Command Modes: Global configuration mode

Note that if all Sector Association entries with a particular BS are deleted (meaning the BS is no longer in use), this BS should be removed from all relevant Neighbor BS lists of other BSs.

3.10.2.3 Displaying Configuration Information for Sector Association Entries

To display configuration information of a specific or all Sector Association entries, run the following command:

npu# show sector-assoc [bs-id-lsb <(1 to 16777215 StepSize 1)> au-slot-no <(1 to 4StepSize 1) | (7 to 9 StepSize 1)> au-port-no <(1 to 4 StepSize 1)>]

Specify the BS ID (bs-id-lsb), AU Slot No. (au-slot-no) and AU Port number (au-port-no) if you want to display configuration information for a particular Sector Association entry. Do not specify values for these parameters if you want to view configuration information for all existing Sector Association entries.

Command Syntax: **npu# show sector-assoc** [bs-id-lsb <(1 to 16777215 StepSize 1)> au-slot-no <(1 to 4StepSize 1) | (7 to 9 StepSize 1)> au-port-no <(1 to 4 StepSize 1)>]

Privilege Level: 1

Syntax Description

Parameter	Description	Presence	Default Value	Possible Values
<bs-id-lsb (1 to 16777215 StepSize 1)>	BS ID Specify only if you want to display configuration of a particular Sector Association entry.	Optional	N/A	1-16777215
<(1 to 4 StepSize 1) | (7 to 9 StepSize 1)>	AU Slot ID Specify only if you want to display configuration of a particular Sector Association entry.	Optional	N/A	1-4, 7-9
<(1 to 4 StepSize 1)>	AU Port Number Specify only if you want to display configuration of a particular Sector Association entry.	Optional	N/A	1-4

Display Format

(for each existing ODU Port if requested for all ODU Ports)

BSIDLSB :<value>

AUSlotNo. :<value>

AUPortNo. :<value>

SectorID :<value>

ODUNo. :<value>

ODUPortNo. :<value>

AntennaNo. :<value>

AntennaPortNo. :<value>

Command Modes

Global command mode

3.11 Monitoring HW and SW Components

This section describes the procedures for:

- "Monitoring Hardware Components" on page 660
- "Displaying System Files" on page 667

3.11.1 Monitoring Hardware Components

You can use the CLI to monitor performance of the following hardware components with respect to:

- "Displaying the Card Types Installed in Shelf Slots 1 - 9" on page 660
- "Displaying the Current Status of Shelf Components" on page 661
- "Displaying the Temperature of the Shelf" on page 663
- "Displaying Utilization of CPU and Memory Resources for the NPU" on page 664
- "Displaying Packets Discarded Via Rate Limiting" on page 665

3.11.1.1 Displaying the Card Types Installed in Shelf Slots 1 - 9

To view the types of cards that are currently installed in slots 1-9 of the shelf run the following command:

npu# show shelf-view

Command Syntax	npu# show shelf-view
Privilege Level	1

Display Format	Slot#	Card Type
	1	<notInstalled/au4x4Modem/other>
	2	<notInstalled/au4x4Modem/other>
	3	<notInstalled/au4x4Modem/other>
	4	<notInstalled/au4x4Modem/other>
	5	npu
	6	notInstalled
	7	<notInstalled/au4x4Modem/other>
	8	<notInstalled/au4x4Modem/other>
	9	<notInstalled/au4x4Modem/other>

Command Modes	Global command mode

3.11.1.2 Displaying the Current Status of Shelf Components

You can view the current status of the following shelf components:

- NPU
- PSU
- PIU
- AVU or (specific fan)

To view the current status of all shelf components, run the following command:

```
npu# show shelf status [{NPU | PSU [<slot id (1-4)>] |PIU [<slot id
(1-2)>] | AVU | Fan [<fan_num (1-10)>]}]
```

NOTE

Refer Figure 3-1 for more information about the slot IDs assigned to each shelf component.

For example, run the following command to view the status of the PSU, slot# 4:

```
npu# show shelf status PSU 4
```

To view the status of all the shelf components, run the following command:

npu# show shelf status

Command Syntax	npu# show shelf status [{NPU | PSU [<slot id (1-4)>] |PIU [<slot id (1-2)>] | AVU | Fan [<fan_num (1-10)>]}]
Privilege Level	1
Syntax Description	

Parameter	Description	Presence	Default Value	Possible Values
[{NPU | PSU [<slot id (1-4)>] |PIU [<slot id (1-2)>] | AVU | Fan [<fan_num (1-10)>]}	Indicates the shelf components for which you want to display the current status. Do not specify any component to view the status of all components.	Optional	N/A	■ NPU ■ PSU <1-4> ■ PIU <1-2> ■ AVU ■ Fan <(1-10>

The displayed information includes the following details:

- NPU:
  - Slot#: 5
  - PrsntState: Installed
  - HWVersion:
  - HWRevision:
  - SerialNum
- AVU
  - PrsntState: Installed/Not Installed
  - HlthState:Healthy/Faulty

- FAN:
  - FAN#: (1-10)
  - HlthState:Healthy/Faulty
- PIU
  - Slot# (1-2)
  - AdmnState: Yes/No
  - ReqHWVer: The configured HW Version- 5 (58A) or 6 (35A)
  - PrsntState: Installed/Not Installed
  - HlthState:Healthy/Faulty
  - OperState: Active/Non-active
  - InstHWVer: The installed HW Version- 5 (58A,) 6 (35A) or 7 (not installed)
- PSU
  - Slot# (1-4)
  - AdmnState: Yes/No
  - PrsntState: Installed/Not Installed
  - HlthState:Healthy/Faulty
  - OperState: Running/Down

3.11.1.3 Displaying the Temperature of the Shelf

To view the current temperature inside the unit, run the following command:

`npu# show shelf temperature`

Command Syntax	npu# show shelf temperature

Privilege Level	1
Display Format	Current shelf temperature: <value> [Celsius] / <value> [Farenheit]
Command Modes	Global command mode

3.11.1.4 Displaying Utilization of CPU and Memory Resources for the NPU

To display the utilization of CPU and memory resources for the NPU, run the following command:

```
npu# show resource usage
```

After you run this command, the current CPU and memory usage is displayed.

NOTE

For more information about setting thresholds for CPU and memory usage, refer to "Displaying CPU and Memory Utilization Limits for the NPU" on page 173.

Command Syntax	npu# show resource usage
Privilege Level	1
Display Format	Resource Usage[in %] CPU <value> Memory 7<value>
Command Modes	Global command mode

3.11.1.5 Displaying Packets Discarded Via Rate Limiting

To retrieve the number of packets discarded because of rate limiting for a specific or all applications (pre-defined, user-defined or all), run the following command:

```
npu# show rate-limit counters {ftp | telnet | tftp | ssh | icmp |
snmp | R4-R6 | igmp | eap | arp | all-others | <user-defined-app> |
all}
```

NOTE

For more information about configuring rate limiting, refer to "Rate Limiting for the NPU" on page 174.

Command Syntax	npu# show rate-limit counters {ftp | telnet | tftp | ssh | icmp | snmp | R4-R6 | igmp | eap | arp | all-others | <user-defined-app> | all}
Privilege Level	1

Syntax Description

Parameter	Description	Presence	Default Value	Possible Values
{ftp | telnet | tftp | ssh | icmp | snmp | R4-R6 | igmp | eap | arp | all-others | <user-defined-app> | all}	Indicates the application for which packets discarded by rate limiting are to be displayed.	Optional	N/A	■ ftp ■ telnet ■ tftp ■ ssh ■ icmp ■ snmp ■ R4-R6 ■ igmp ■ eap ■ arp ■ all-others: Refers to all other applications that may send packets to the CPU, and are not in the list of pre-defined or user-defined applications. ■ <user defined> ■ all: Refers to all applications that may attempt to send packets to the CPU.

Display Format	RATELIMIT COUNTERS: Pre-defined applications ---------- Application Packets discarded <Application> <Number of Packets Discarded> <Application> <Number of Packets Discarded> SSH <Application> <Number of Packets Discarded> SNMP RATELIMIT COUNTERS: User-defined applications ---------- Application Packets discarded <Application> <Number of Packets Discarded>
Command Modes	Global command mode

3.11.2 Displaying System Files

The following system files reside in the TFTP boot directory of the NPU:

- Performance data files: Contain performance counters for system modules. (For more information about the modules for which you can configure collection and storage of performance data, refer to Section 3.4.14. These files are available in the path, /tftpboot/management/performance.
- System log: Contain log and trace messages. (For more information about configuring logging and tracing, refer to Section 3.12.1 and Section 3.4.13. These files are available in the path, /tftpboot/management/system_logs/.
- User history files: Contain information about the commands/tasks executed by the user. These files are available in the path, /tftpboot/management/user_log.

In addition, Collected System Logs files with complete status and configuration details may also be available (for details refer to “Creating a Collected System Logs File” on page 396).

To display a list of performance data, system log, active alarms, or user history files, run the following command:

npu# show saved {Performance | Active-alarm | Log | User-history} files [recent <1-65535>]

For example, if you want to view the 30 most recently saved log files, residing in the TFTP boot directory of the NPU, run the following command:

npu# show saved Log files recent 30

Command Syntax

```
npu# show saved {Performance | Active-alarm | Log | User-history}
files [recent <1-65535>]
```

Privilege Level

1

Syntax Description

Parameter	Description	Presence	Default Value	Possible Values
`Performance|Active-alarm|Log|User-history`	Indicates the type of system files that are to be displayed:	Mandatory	N/A	■ Performance ■ Active-alarm ■ Log ■ User-history
`[recent <1-65535>]`	Indicates the number of files to be displayed. The most recently saved files are displayed. If you do not specify a value for this parameter, all the files of a particular type are displayed.	Optional	N/A	1-65355

Command Modes

Global command mode

To display a list of collected system logs files, run the following command:

npu# show saved system logs

Command Syntax

```
npu# show saved system logs
```

Privilege Level	1

Command Modes	Global command mode

3.12 Troubleshooting

3.12.1 Configuring Tracing

The system can generate traces to be used for tracing the execution sequence of a module and determining the actual cause of an erroneous condition. Traces are recorded for events that occur with respect to the following system modules:

- System startup procedures: Refers to all procedures/events that occur during system startup.
- NPU/AU upgrade procedures: Refers to all the procedures executed while upgrading the NPU/AU.
- Fault management procedures: Refers to internal processes that are executed for monitoring erroneous conditions or fault conditions.
- System performance procedures: Refers to internal processes that are executed for monitoring system performance.
- Shelf management procedures: Refers to internal processes that are executed for monitoring the health and temperature of all hardware components (other than the NPU) such as the AU, PIU and PSU.
- WiMAX signaling protocols: Refers to all the protocols that implement the ASN-GW functionality.
- User interface: Refers to the command line or remote management interface used for executing all user-initiated events such as system shut down or reset.
- AU Manager: Refers to all internal processes used for fault, configuration, and performance management for AU.

The system stores a maximum of 1000 trace and log messages, after which the oldest messages are overwritten. First configure system-level tracing, and then configure tracing separately for each module. This section describes the commands to be used for:

- “Managing System-level Tracing” on page 671
- “Configuring Module-level Tracing” on page 674

3.12.1.1 Managing System-level Tracing

System-level tracing refers all the procedures to be executed for managing tracing for the entire system. To manage system-level tracing:

- Enable/disable logging for the entire system and specify the destination (file or console) where traces are to be maintained.
- Make periodic backups of trace files

You can, at any time, view the current destination to where traces are maintained. After you have enabled/disabled system-level logging and specified the destination for storing log messages, you can configure logging separately for each module.

This section describes the commands to be used for:

- "Enabling System-level Tracing" on page 671
- "Disabling System-level Tracing" on page 673
- "Displaying the Current Status of Trace Destinations" on page 673

3.12.1.1.1 Enabling System-level Tracing

You can enable traces for all modules across the system and specify the destination where traces should be written. The destination can be either a file stored on the local system or console. To view whether tracing to file or console is enabled or disabled, refer Section 3.12.1.1.3.

NOTE

By default, system-level tracing to file is disabled. If you enable tracing to file, traces are written to the same file that contains log messages. This file is not maintained after system reset. It is recommended that you periodically make a backup of this file on the NPU flash. For details, refer to Section 3.4.13.1.5.

To enable system-level tracing, run the following command:

```
npu(config)# trace destination {file|console}
```

The system maintains a maximum of 1000 trace and log messages, after which the oldest messages are overwritten.

NOTE

After you have enabled system-level tracing, you can configure the types of traces (brief or detailed) to be generated for each module. By default, module-level tracing is disabled. To configure tracing for each module, refer to Section 3.12.1.2.

IMPORTANT

An error may occur if:

- Tracing is already enabled for the requested destination (file or console).
- An internal error has occurred.

Command Syntax

```
npu(config)# trace destination {file|console}
```

Privilege Level

10

Syntax Description

Parameter	Description	Presence	Default Value	Possible Values
{file|console}	Indicates whether tracing to a file or console is to be enabled for the entire system.	Mandatory	N/A	■ **file**: Indicates that system-level traces are to be written to a file. ■ **console**: Indicates that the system-level traces are to be written to a console.

Command Modes

Global configuration mode

3.12.1.1.2 Disabling System-level Tracing

To disable tracing at the system-level, run the following command:

`npu(config)# no trace destination {file|console}`

IMPORTANT

An error may occur if:

- Tracing is already disabled for the requested destination (file or console).
- An internal error has occurred.

Command Syntax

`npu(config)# no trace destination {file|console}`

Privilege Level

10

Syntax Description

Parameter	Description	Presence	Default Value	Possible Values
{file|console}	Indicates whether tracing to file or console is to be disabled for the entire system.	Mandatory	N/A	■ **file**: Indicates that tracing to file is to be disabled. ■ **console**: Indicates that tracing to console is to be disabled.

Command Modes

Global configuration mode

3.12.1.1.3 Displaying the Current Status of Trace Destinations

To view the current status of trace destinations, that is, whether the system is enabled/disabled for tracing to file or console, run the following command:

`npu(config)# show trace destination`

IMPORTANT

This command may not be successfully executed if an internal error occurs while processing the result.

Command Syntax	`npu(config)# show trace destination`
Privilege Level	1
Display Format	Trace File : <Enabled/Disabled> Console : <Enabled/Disabled> Trace Server : <Enabled/Disabled> (ServerIP - <IP address>)
Command Modes	Global command mode

3.12.1.2 Configuring Module-level Tracing

After configuring module-level tracing, you can specify whether brief or detailed traces should be recorded for the following modules:

- System startup procedures
- NPU/AU upgrade procedures
- Fault management procedures
- System performance procedures
- Shelf Management procedures
- WiMAX signaling protocols
- User interface
- AU Management procedures

You can also disable tracing for a particular module. This section describes the commands to be used for:

- "Configuring Trace Levels" on page 675
- "Disabling Module-level Tracing" on page 676
- "Displaying Trace Levels" on page 677

NOTE

By default, module-level tracing is disabled.

3.12.1.2.1 Configuring Trace Levels

To specify the trace level (brief or detailed) for each module, run the following command:

```
npu(config)# trace level
[{StartupMgr|SWDownload|FaultMgr|PerfMgr|ShelfMgr|SIGASN|UserIF|AU
Mgr}] {Brief|Detailed}
```

The parameters in this command correspond to the system modules/procedures listed in the following table:

Table 3-33: Modules for which Tracing can be Enabled

Parameter	Refers to...
StartupMgr	System startup procedures
SWDownload	Software upgrade procedures
FaultMgr	Fault management procedures
ShelfMgr	Shelf management procedures
SIGASN	WiMAX signaling protocols
UserIF	User-initiated procedures
AUMgr	Internal processes used for managing AU
PerfMgr	Performance management procedures

Specify the module name if you want to configure the trace level separately for this module. If you do not specify the name of the module, the trace level that you configure in this command is applied to all modules.

For example, run the following command if you want logs to be created for WiMAX signaling protocols when the trace level configured to Detailed:

`npu(config)# trace level SIGASN Detailed`

Command Syntax

`npu(config)# trace level` [{StartupMgr|SWDownload|FaultMgr|PerfMgr|ShelfMgr|SIGASN|UserIF|AUMgr}] {Brief|Detailed}

Privilege Level

10

Syntax Description

Parameter	Description	Presence	Default Value	Possible Values
`[{StartupMgr|SWDownload|FaultMgr|PerfMgr|ShelfMgr|SIGASN|UserIF|AUMgr}]`	Indicates the name of the module for which the trace level is to be configured. If you do not specify any value for this parameter, the same trace level is applied to all modules. For more information about these parameters, refer Table 3-33.	Optional	N/A	■ StartupMgr ■ SWDownload ■ FaultMgr ■ PerfMgr ■ ShelfMgr ■ SIGASN ■ UserIF ■ AUMgr
`{Brief|Detailed}`	Indicates the trace level to be applied for a particular or all modules.	Mandatory	N/A	■ Brief ■ Detailed

Command Modes

Global configuration mode

3.12.1.2.2 Disabling Module-level Tracing

To disable tracing for one or all modules, run the following command:

`npu(config)# no trace level [{StartupMgr|SWDownload|FaultMgr|PerfMgr|ShelfMgr|SIGASN|UserIF|AUMgr}]`

Specify the module if you want to disable tracing for that module. If you do not specify the name of the module, tracing is disabled for all modules.

For example, run the following command if you want to disable tracing for WiMAX signaling protocols:

```
npu(config)# no trace level SIGASN
```

Command Syntax

npu(config)# no trace level [{StartupMgr|SWDownload|FaultMgr|PerfMgr|ShelfMgr|SIGASN|UserIF|AUMgr}]

Privilege Level

10

Syntax Description

Parameter	Description	Presence	Default Value	Possible Values
`[{StartupMgr|SWDownload|FaultMgr|PerfMgr|ShelfMgr|SIGASN|UserIF|AUMgr}]`	Indicates the name of the module for which tracing is to be disabled. If you do not specify any value for this parameter, tracing is disabled for all functionalities. For more information about these parameters, refer Table 3-33.	Optional	N/A	■ StartupMgr ■ SWDownload ■ FaultMgr ■ PerfMgr ■ ShelfMgr ■ SIGASN ■ UserIF ■ AUMgr\

Command Modes

Global configuration mode

3.12.1.2.3 Displaying Trace Levels

To view the trace levels configured for one or more modules, run the following command:

```
npu(config)# show trace level
[{StartupMgr|SWDownload|FaultMgr|PerfMgr|ShelfMgr|SIGASN|UserIF|AU
Mgr}]
```

Specify the module for which you want to view the configured trace level. If you do not specify the name of the module, the trace levels configured for all modules is displayed.

Command Syntax

```
npu(config)# show trace level
[{StartupMgr|SWDownload|FaultMgr|PerfMgr|ShelfMgr|SIGASN|UserIF|AUMgr}]
```

Privilege Level

1

Syntax Description

Parameter	Description	Presence	Default Value	Possible Values
`[{StartupMgr|SWDownload|FaultMgr|PerfMgr|ShelfMgr|SIGASN|UserIF|AUMgr}]`	Indicates the name of the module for which you want to display the configured trace levels. If you do not specify any value for this parameter, the trace levels for all modules are displayed. For more information about these parameters, refer Table 3-33.	Optional	N/A	■ StartupMgr ■ SWDownload ■ FaultMgr ■ PerfMgr ■ ShelfMgr ■ SIGASN ■ UserIF ■ AUMgr

Display Format

Module Name : Trace level

<module name> : <Trace Level>

Command Modes

Global command mode

3.12.2 Configuring Port Monitoring

The port monitoring feature enables you to mirror all incoming and outgoing traffic on an interface to another interface. You can configure one interface as the destination interface to which traffic from multiple interfaces can be mirrored. This section describes the commands to be executed for enabling/disabling port

monitoring for source and destination interfaces or displaying configuration information for a particular interface.

To enable port monitoring, you are required to configure:

- Source interfaces: Refers to the FastEthernet or GigabitEthernet interface for which incoming, outgoing or both types of traffic is to be monitored. You can configure port monitoring for one or more source interfaces.
- Destination interface: Refers to the interface where the packets are sent for analysis.
- Direction of the traffic that is to be monitored

The following table lists the interfaces that can be mirrored, and the port numbers mapping to these interfaces:

Table 3-34: Interface to Ethernet Port Mapping

Ethernet Port	Interface Type	Interface ID
AU1	Fast Ethernet	0/1
AU2	Fast Ethernet	0/2
AU3	Fast Ethernet	0/3
AU4	Fast Ethernet	0/4
AU5	Fast Ethernet	0/5
AU6	Fast Ethernet	0/6
AU7	Fast Ethernet	0/7
MGMT	Fast Ethernet	0/8
CASCD	Gigabit Ethernet	0/9

This section describes the commands to be used for:

- “Enabling the Port Monitoring Session” on page 680
- “Disabling a Port Monitoring Session” on page 682
- “Displaying Configuration Information for Source and Destination Interfaces” on page 684

3.12.2.1 Enabling the Port Monitoring Session

The port monitoring session refers to the association of a destination interface with one or more source interfaces. You can monitor incoming, outgoing or both types of traffic that is mirrored from the source interface to the destination interface.

NOTE

For the current release, only one monitor session can be set up. This means that only one destination can be configured for one or more source interfaces.

Run the following command to enable port monitoring for a source or destination interface:

```
npu(config)# monitor session { source interface <interface-type>
<interface-id> [{ rx | tx | both }] | destination interface
<interface-type > <interface-id>}
```

For example, to configure the Gigabit Ethernet 0/9 interface as the destination interface, you can run the following command:

```
monitor session destination interface gigabitethernet 0/9
```

You can now run the following commands to mirror incoming traffic for the source interfaces, Fast Ethernet 0/1 and Fast Ethernet 0/3:

```
npu(config)# monitor session source interface fastethernet 0/1 rx
npu(config)# monitor session source interface fastethernet 0/3 rx
```

All incoming and outgoing traffic for the 0/1 and 0/3 interfaces will be mirrored to the 0/9 interface.

IMPORTANT

An error may occur if:

- The interface ID of the source or destination port you have specified is invalid. Refer Table 3-34 for the interface ID corresponding to each interface type.
- The port specified as the source interface is already specified as the destination interface for another port or vice versa.

Command Syntax	**npu(config)# monitor session** { **source interface** <interface-type> <interface-id> [{ **rx** | **tx** | **both** }] **| destination interface <interface-type > <interface-id>**}

Privilege Level

10

Syntax Description

Parameter	Description	Presence	Default Value	Possible Values
{source interface <interface-type> <interface-id> | destination interface <interface-type > <interface-id>}	Indicates whether port monitoring is to be enabled for a source or destination interface. Specify the interface type and interface ID for the interface to be configured.	Mandatory	N/A	Interface type: ■ fastethernet ■ gigabitetherne Interface ID: ■ 0/1 (for Fast Ethernet AU 1 port) ■ 0/2 (for Fast Ethernet AU 2 port) ■ 0/3 (for Fast Ethernet AU 3 port) ■ 0/4 (for Fast Ethernet AU 4 port) ■ 0/5 (for Fast Ethernet AU 5 port) ■ 0/6 (for Fast Ethernet AU 6 port) ■ 0/7 (for Fast Ethernet AU 7 port) ■ 0/8 (for Fast Ethernet MGMT port) ■ 0/9 (for Gigabit Ethernet CSCD port)
{ rx | tx | both }	Indicates whether the incoming, outgoing or both types of traffic is to be mirrored for the source interface.	Optional	Both	■ rx ■ tx ■ both

Command Modes	Global configuration mode

3.12.2.2 Disabling a Port Monitoring Session

You can disable a port monitoring session for a source or destinations interface for which port monitoring is enabled. Run the following command to disable port monitoring for a source or destination interface:

```
npu(config)# no monitor session [{source interface <interface-type>
<interface-id> [{ rx | tx | both }]|destination interface
<interface-type > < interface-id >}]
```

IMPORTANT

An error may occur if:

- The interface ID of the source or destination port you have specified is invalid. Refer Table 3-34 for the interface ID corresponding to each interface type.
- Port monitoring is not enabled for the source or destination interface for which you are trying to disable port monitoring.

Command Syntax	**npu(config)# no monitor session** [{**source interface** <interface-type> <interface-id> [{ rx | tx | both }]|**destination interface** <interface-type > < interface-id >}]
Privilege Level	10

Syntax Description

Parameter	Description	Presence	Default Value	Possible Values
[{source interface <interface-type> <interface-id> |destination interface <interface-type > < interface-id >}]	Indicates whether port monitoring is to be disabled for a source or destination interface. Specify the interface type and interface ID for the interface to be configured. If source/destination interface types/id are not specified then all enabled port monitoring sessions will be disabled.	Mandatory	N/A	Interface type: ■ fastethernet ■ gigabitetherne Interface ID: ■ 0/1 (for Fast Ethernet) ■ 0/2 (for Fast Ethernet) ■ 0/3 (for Fast Ethernet) ■ 0/4 (for Fast Ethernet) ■ 0/5 (for Fast Ethernet) ■ 0/6 (for Fast Ethernet) ■ 0/7 (for Fast Ethernet) ■ 0/8 (for Fast Ethernet) ■ 0/9 (for Gigabit Ethernet)
{ rx | tx | both }	Indicates whether the incoming, outgoing or both types of traffic is to be disabled for mirroring for the source interface.	Optional	Both	■ rx ■ tx ■ both

Command Modes

Global configuration mode

3.12.2.3 Displaying Configuration Information for Source and Destination Interfaces

To display configuration information for port monitoring, that is, the source and destination interfaces for which this feature is enabled, run the following command:

`npu# show port-monitoring`

Command Syntax	npu# show port-monitoring
Privilege Level	1
Display Format	Port Monitoring: enabled Monitor Port: Gi0/9 Port Ingress-Monitoring Egress-Monitoring ---- ---------- ---------- Fa0/1 <status> <status> Fa0/2 <status> <status> Fa0/3 <status> <status> Fa0/4 <status> <status> Fa0/5 <status> <status> Fa0/6 <status> <status> Fa0/7 <status> <status> Fa0/8 <status> <status> Gi0/9 <status> <status>
Command Modes	Global configuration mode

Chapter 4

Operation and Administration of the Micro BTS

In This Chapter:

- “Micro BTS System Management” on page 687
- “The Monitor Program” on page 688
- “IP Addresses Configuration” on page 691
- “The Main Menu” on page 692
- “BTS Menu” on page 693
- “Sector Menu” on page 706
- “BS Menu” on page 708
- “Equipment Menu” on page 735
- “GPS Menu” on page 740

4.1 Micro BTS System Management

The Micro BTS can be managed using any of the following options:

- SNMP based management using AlvariSTAR/AlvariCRAFT (or another network management system customized to support management of the system).
- Using Telnet to access the embedded Monitor application via the Ethernet port.
- Accessing the embedded Monitor application locally via the MON port.

NOTE

It is not possible to manage the Base Transceiver Station via the wireless link (from the MS's side).

This chapter describes how to manage the system using the Monitor application. For information on managing the system using AlvariSTAR/AlvariCRAFT refer to the applicable documentation.

4.2 The Monitor Program

4.2.1 Accessing the Monitor Program

To access the Monitor program via the MON connector:

1. Use the Monitor cable to connect the MON connector to the COM port of your ASCII ANSI terminal or PC. The COM port connector on the Monitor cable is a 9 pin D type plug.
2. Run a terminal emulation program, such as HyperTerminal™.
3. Set the communication parameters as shown in the following table:

Table 4-1: COM Port Configuration

Parameter	Value
Baud Rate	9600
Data Bits	8
Stop Bits	1
Parity	None
Flow Control	Xon/Xoff
Port	Connected COM port

The password prompt is displayed. Enter the password and press the Enter key to get to the Main menu. The default password is “installer”.

To access the Monitor program using Telnet:

1. The PC used for accessing the Monitor program should be configured according to the BTS Management Connectivity parameters (see “Connectivity” on page 694).
2. Run the Telnet program connecting to the IP address of the connected port.
3. The Enter the password message is displayed. Enter the password and press the Enter key to get to the Main menu. The default password is “installer”.

4.2.2 Using the Monitor Program

This section describes the Monitor program structure and navigation rules.

- Each menu or submenu specifies the unit type, the management IP address, the running SW version and a description of the menu.
- Each menu or submenu displays a list of numbered options. To access an option, enter the number of the required option at the > prompt.
- At any point in the program, you can use the **Esc** key to return to the previous menu (one level up) without applying any change.
- The first selectable item in most menus is the Show option, enabling to view the current configuration of the applicable parameters. For some menus some additional status information is displayed.
- For certain parameters, an updated value is applied only after reset or after entering a specific command. For these parameters, both Configured and Current values are displayed in relevant Show menus.
- The Update/Add options will display all applicable parameters line by line, allowing to conveniently edit all of them. The availability and/or value range of certain parameters may change according to the value selected for a previous parameter belonging to the same group. The current value is displayed for each parameter. To keep the current value - press **Enter**. To change it - enter a new value and press **Enter**. The new/modified configuration will take effect only after completing the configuration process for the all relevant parameters.
- Press the **Tab** key for context sensitive help text (where applicable).
- If an erroneous value was entered - the reason of the error or help text will be displayed, and the parameter entry text will be displayed again.
- Many menus include a Select By option, enabling to get a sub-menu for a selected entity according to the selection criteria. hen prompted to enter selection criteria, prs the **Tab** key to display the valid selection values.
- If the Monitor program is not used for the period of time defined by the Monitor Inactivity Time-out (see “Monitor Inactivity Timeout” on page 697), the session will be terminated automatically.

- Select the Exit option in the Main menu to exit the program and terminate the session.

4.3 IP Addresses Configuration

4.3.1 IP Address Configuration Restrictions

1 The following IP addresses should not be used and will be rejected:

- 0.0.0.0
- 224.0.0.0 - 255.255.255.255 (Multicasts, RFC 3171 D, RFC 1700 E)

4.3.2 IP Subnets

In a binary representation (32 bits) a Subnet Mask string must comprise a series of contiguous binary '1's starting from the MSB, followed by a series of contiguous binary '0's.

Subnet Masks 0.0.0.0 (all zeros, meaning “nothing”) and 255.255.255.255 (all ones, meaning “this address only”) are illegal and will be rejected.

4.4 The Main Menu

The Main menu of the Monitor program includes the following options:

1 - BTS (see “BTS Menu” on page 693)

2 - Sector (see “Sector Menu” on page 706)

3 - BS (see “BS Menu” on page 708)

4 - Equipment (see “Equipment Menu” on page 735)

5 - GPS (see “GPS Menu” on page 740)

X - Exit (select to exit the Monitor program and terminate the Telnet session)

4.5 BTS Menu

The BTS menu includes the following options:

- "General"
- "Connectivity"
- "Unit Control"
- "Management"

4.5.1 General

The BTS General submenu enables viewing the current values and updating the general BTS parameters. The BTS General parameters are:

- "BTS Number"
- "BTS Name"
- "BTS Address"
- "Contact Person"

4.5.1.1 BTS Number

A BTS identifier for management purposes. Should be unique in the managed network.

The range is from 1 to 999999.

The default is 0. A different number (unique in the managed network) must be configured.

4.5.1.2 BTS Name

An optional descriptive parameter. A string of up to 32 printable characters.

The default is null (an empty string).

4.5.1.3 BTS Address

An optional descriptive parameter. A string of up to 70 printable characters.

The default is null (an empty string).

4.5.1.4 Contact Person

An optional descriptive parameter. A string of up to 32 printable characters.

The default is null (an empty string).

4.5.2 Connectivity

The Connectivity submenu includes the following options:

- "Management Interface"
- "ASN-GW Load Balancing Pools"
- "L1 & L2"

4.5.2.1 Management Interface

The Management submenu enables viewing the current values and updating the Management interface parameters. The Management Interface parameters are:

- "VLAN ID"
- "Source IP Address"
- "IP Subnet mask"
- "802.1P Priority"
- "DSCP"
- "Next Hop Gateway"

4.5.2.1.1 VLAN ID

The VLAN ID to be used with management traffic.

Valid values are 11-100, 110-4094.

The default is 12.

4.5.2.1.2 Source IP Address

The IP address of the Management interface.

The default is 192.168.1.1.

4.5.2.1.3 IP Subnet mask

The Subnet Mask of the Management interface.

The default is 255.255.255.0.

4.5.2.1.4 802.1P Priority

The 802.1P (VLAN) Priority of management traffic.

The range is 0-7.

The default is 0.

4.5.2.1.5 DSCP

The DSCP value of management traffic.

The range is 0-63.

The default is 0.

4.5.2.1.6 Next Hop Gateway

The Default Gateway IP address of the Management interface.

The default is 0.0.0.0 (must be changed to a valid value).

The Default Gateway must be in the subnet of the IP Address.

4.5.2.2 ASN-GW Load Balancing Pools

The Load Balancing feature provides a WiMAX operator with the capability to build resilient ASN infrastructure using ASN-GW redundancy. Every BS is provisioned with two lists of redundant ASN-GWs (pools). The BS applies round-robin mechanism in order to pick an Authenticator for each MS that performs initial network entry. This should eventually distribute the load between Anchor ASN-GWs. Geographical site backup can be achieved by using different priority of ASN-GW pools (Authenticator "metric").

At the unit (BTS) level, up to two pools (with different priorities), each with up to 10 ASN-GWs, can be defined. Each BS defined in the unit will “inherit” these pools.

The ASN-GW Load Balancing Pools submenu includes two options: Primary Pool and Secondary Pool. Select the Primary or Secondary Pool option to view or update the pool’s content. The options available for each pool are:

- Show: Select this option to view the current content of the pool.
- Add: Select this option to add an address to the pool (up to a maximum of 10 addresses per pool). You will be prompted to define the index for the entry (a

unique number in the range from 1 to 10) before defining the ASN-GW IP address. An IP address must be unique per both pools.

- Select: Use this option to select an entry in the pool by it's index. You can then view the entry's IP address, update the IP address, or delete the entry.

4.5.2.3 L1 & L2

The L1 & L2 option enables viewing or updating the parameters of the Ethernet interface:

- **Operational State**: The read-only operational status of the port (Up or Down).
- **Administrative State**: The administrative status of the port (Up or Down).
- **Auto Negotiation**: The mode for negotiating the port speed and the duplex mode with the link partner (Auto or Manual). The default is Auto.
- **Port Speed**: The port speed to be used for the physical interface (valid values are 10, 100 or 1000 Mbps). Configurable only if Auto Negotiation is set to Manual. The default is 1000 Mbps.
- **Duplex Mode**: The duplex mode for the interface (Full-Duplex or Half Duplex). Configurable only if Auto Negotiation is set to Manual. The default is Full-Duplex.

4.5.3 Unit Control

The Unit Control menu enables various general control functions such as resetting the BTS, managing the SW versions of the BTS and uploading/downloading configuration backup files.

The Unit Control menu includes the following options:

- "Reset"
- "Monitor Inactivity Timeout"
- "SW Version Control"
- "TFTP Server"
- "Files Control"

- "ShutDown Operation"

4.5.3.1 Reset

Select this option to reset the BTS. To avoid unintentional reset, you will be prompted to confirm the reset request. Changes to some of the configurable parameters are applied only after reset.

4.5.3.2 Monitor Inactivity Timeout

The Monitor Inactivity Timeout (min) parameter determines the amount of inactive time following which the unit automatically exits the Monitor program.

The time out duration can range from 0 to 60 minutes. 0 means no inactivity timeout.

The default value is 10 minutes.

4.5.3.3 SW Version Control

The BTS can contain two SW versions:

- Operational: Each time the BTS resets it will reboot using the version defined as Operational.
- Shadow: Normally the Shadow version is the backup version. Each time a new SW File is downloaded to the BTS, it will be stored as a Shadow version, replacing the previous Shadow Version.

The typical process of upgrading to a new SW version includes the following steps:

1. Download the new SW File to the BTS. It will be stored as the Shadow version.
2. Reset and run the BTS from its Shadow version. Note that at this stage, if a reset were to occur, the BTS will return to the previous Operational version.
3. If you want to continue using the new version, swap the Shadow and Operational versions. The new (currently running) version is now defined as Operational, and will be used each time the BTS reboots. The previous version is defined now as Shadow.

Each SW version includes two identifiers:

- SW File, which is the name of the downloaded SW file. This name does not necessarily include clear identification of the SW version number.
- SW Version, which provides the SW version number.

The SW Version Control menu includes the following options:

- "SW Inventory"
- "SW Version Control"

4.5.3.3.1 SW Inventory

Select this option to view the current available versions and the running version:

- Operational SW Version Number
- Shadow SW Version Number
- Current Running SW Source: Operational or Shadow

4.5.3.3.2 SW Version Control

The SW Version Control submenu includes the following options:

- "Show SW Versions"
- "Show Activation and Status Parameters"
- "Load to Shadow"
- "Reset and Run from Shadow"
- "Set Running Version as Operational"

4.5.3.3.2.1 Show SW Versions

Select this option to view the current available versions and the running version:

- Operational SW Version Number
- Shadow SW Version Number
- Current Running SW Source: Operational or Shadow

4.5.3.3.2.2 Show Activation and Status Parameters

Select this option to view the status of the last requested download operation.

4.5.3.3.2.3 Load to Shadow

The Load to Shadow option enables initiating a process of loading a new SW file to the BTS. The loaded SW file will be stored as the new Shadow file.

- The IP address of the TFTP Server holding the SW file to be loaded is defined by the TFTP Server parameter (see "TFTP Server" on page 699) You will be prompted to enter the **File Path And File Name** (up to 80 characters)

4.5.3.3.2.4 Reset and Run from Shadow

Select the Reset and Run from Shadow option to reset the BTS and run the Shadow version after power up. To avoid unintentional actions you will be prompted to confirm the request.

4.5.3.3.2.5 Set Running Version as Operational

When the BTS is running the Shadow version (after selecting Reset and Run from Shadow), it will boot from the Operational version after the next reset. Select the Set as Operational option if you want to swap versions so that the running version will become the Operational version and will be the version to be used after reset. To avoid unintentional actions you will be prompted to confirm the request.

4.5.3.4 TFTP Server

The TFTP Server option enables viewing or updating the IP address of the TFTP server to be used for SW download.

4.5.3.5 Files Control

The Files Control submenu enables creating backup files of the BTS configuration and downloading a configuration file to the BTS.

The Files Control menu includes the following menu options:

- "Restore"
- "Backup"
- "Backup Files"

4.5.3.5.1 Restore

The Restore submenu enables restoring a previously saved backup configuration. The Restore submenu includes the following options:

4.5.3.5.1.1 Restore From External File

The Restore From External File submenu includes the following options:

- **Show**: Select this option to view the details of the last request for restoring a configuration file from an external TFTP server. The displayed details include:
  - » **File Name**
  - » **TFTP Server IP Address**
  - » **Process Status**
- **Update**: Select this option to initiate a new process of restoring a configuration file from an external TFTP server. You will be prompted to define the following parameters:
  - » **File Name**: The path to and file name of the file to be downloaded. A string comprising 1 to 254 characters.
  - » **TFTP Server IP Address**: The IP address of the TFTP Server from which the file should be loaded.
  - » **Start Download?**: Select the download File option to initiate the process.

NOTE

To avoid loss of connectivity behind a router, the Management Connectivity parameters are not changed when loading a Full backup file to the BTS. The values of these parameters configured in the target BTS before the loading process, are maintained.

4.5.3.5.1.2 Restore From Local File

he Restore From Local File submenu includes the following options:

- **Show**: Select this option to view the details of the last request for restoring a configuration file from the unit's memory. The displayed details include:
  - » **Restore From Local Backup:** noAction or restoretoRAM
  - » **Local File Name**

- **Update**: Select this option to initiate a new process of restoring a local configuration file. You will be prompted to define the following parameters:

  - **Restore From Local Backup: Select** noAction or restoretoRAM. If you selected restoretoRAM, you will be prompted to select the name of the local file.

  - **Local File Name**: The name of the local backup file to be restored. A string comprising 1 to 30 characters. Must be the name of one of the existing backup file (see "Backup Files" on page 701).

4.5.3.5.2 Backup

A backup file of the device's configuration is created automatically every day. The Backup submenu enables defining the time of day for execution of the automatic backup process. You can also initiate a manual request for creation of a backup file. The BTS holds the last 3 backup files.

The Backup menu includes the following options:

- **Automatic Configuration Backup**: Select to view the current Daily Backup Time or to update it. The default is 00:00 (midnight).

- **Create Backup File**: Select this option to initiate a request for creating a backup file of the current configuration or to view the status of last request for creating a backup file:

  - **Update**: Select to initiate creation of a backup file for the current configuration.

  - **Show**: Select to view the Process Status of last request for creating a backup file.

4.5.3.5.3 Backup Files

The Backup Files option enables the viewing the path to and file names of the current local backup files (up to 3). The file's name includes its creation date and time in the format YYYYMMDDHHMM.xml.gz.

4.5.3.6 ShutDown Operation

The ShutDown Operation submenu enables selecting one of the following options:

- **shutdown**: Select this option to shut down the system. To avoid unintentional shut down, you will be prompted to confirm the request.

IMPORTANT

Before shutting down the system, it is recommended that you save the configuration file. The last saved configuration is used for rebooting the system.

After shutting down the system you cannot restart it from remote. To start up the unit (after shut down), switch off and then switch on the power supply,

- **reset**: Select this option to reset the BTS. To avoid unintentional reset, you will be prompted to confirm the reset request. Changes to some of the configurable parameters are applied only after reset.

- **resettoFactoryDefault**: Select this option to restore the factory default configuration of all BTS parameters. All parameters will revert to their default values after the next reset. To avoid unintentional action, you will be prompted to confirm the request.

IMPORTANT

Reset to default configuration will affect the ability for remote management of the unit.

- **noAction**: Select this option to exit the Shutdown Operation submenu without any action.

- **resettoFactoryDefaultwithConnectivity**: Select this option to restore factory default configuration without changing any of the parameters required for maintaining management connectivity to the unit. To avoid unintentional action, you will be prompted to confirm the request.

  The parameters that are maintained without any change include:

  - BTS Name
  - Management interfaces parameters
  - L1 & L2 parameters
  - SNMP Traps Managers configurations
  - Authorized Managers configurations

4.5.4 Management

The Management menu includes the following options:

- “SNMP Traps Managers”
- “Authorized Managers”

4.5.4.1 SNMP Traps Managers

Up to 5 SNMP Traps Managers can be defined. The SNMP Trap Managers menu includes the following options:

- “Show”
- “Add”
- “Select”

4.5.4.1.0.1 Show

Select this option to view the details of the currently defined SNMP Traps Managers.

4.5.4.1.0.2 Add

Select this option to add a new SNMP Traps Manager. The SNMP Traps Manager parameters are:

- “IP Address”
- “Port Number”
- “Community”
- “Enable Traps Distribution”

4.5.4.1.0.2.1 IP Address

The IP address of the Traps Manager.

4.5.4.1.0.2.2 Port Number

The port number on which the Trap Manager will listen for messages from the Agent. The range is from 1 to 65535. The port on which the management system listens for traps is 162.

4.5.4.1.0.2.3 Community

The name of the SNMP Read Community used by the Trap Manager. Traps are sent toward those Managers for which this parameter is configured. A string of up to 10 printable characters, case-sensitive.

4.5.4.1.0.2.4 Enable Traps Distribution

Indicates whether the sending of traps to the management station is enabled or disabled.

4.5.4.1.0.3 Select

Use this option to select one of the existing SNMP Traps Managers by its IP address. You can then view the details of the selected manager, update its parameters (excluding the IP address) or delete it.

The Selected Manager submenu includes the following options:

- **Show:** For viewing the details of the selected Manager.
- **Update:** For updating the properties of the selected Manager.
- **Delete:** For deleting the selected Manager from the database.

4.5.4.2 Authorized Managers

An SNMP Manager comprises a pair of SNMP Communities (Read Community and Write Community). A management station is permitted to manage the BTS using SNMP only if it uses one of the configured SNMP Communities (or a pair of SNMP Communities). A maximum of five SNMP Managers can be configured. The Authorized Managers submenu enables defining the properties of management stations that are allowed to manage the BTS using SNMP.

The Authorized Manager submenu includes the following options:

- "Show"
- "Add"
- "Select"

4.5.4.2.1 Show

Select this option to view the details of all currently defined authorized managers.

4.5.4.2.2 Add

Select this option to add a new authorized manager. Up to 5 Authorized Managers can be defined. The following parameters can be configured:

- "Manager Number"
- "Read Community"
- "Write Community"

4.5.4.2.2.1 Manager Number

A unique number from 1 to 5.

4.5.4.2.2.2 Read Community

The SNMP Read Community to be used by the Authorized Manager. A null Read Community means that the read (get) operation can only be performed using the Write Community.

Valid Community strings: 1 to 32 printable characters, case sensitive.

4.5.4.2.2.3 Write Community

The SNMP Write Community to be used by the Authorized Manager. A null Write Community means that the Authorized Manager has Read only access rights.

Valid Community strings: 1 to 32 printable characters, case sensitive.

NOTE

The Read and Write Communities are mandatory and both must be defined (other than null). Duplication of Communities pairs is not allowed (each pair must be unique).

4.5.4.2.3 Select

This option enables selecting an existing authorized manager for viewing or updating its properties or for deleting it from the database. The selection is based on the authorized manager's number.

The Selected Manager submenu includes the following options:

- **Show:** For viewing the details of the selected Manager.
- **Update:** For updating the properties of the selected Manager.
- **Delete:** For deleting the selected Manager from the database.

4.6 Sector Menu

The unit supports a single sector.

The Sector menu includes the following options:

- "Sector Definition"
- "Sector Association"

4.6.1 Sector Definition

The Sector Definition menu enables viewing or modifying the sector description parameters which are informative descriptions for inventory purposes. The Sector Definition parameters are:

4.6.1.1 Name

The sector name. An optional descriptive string of up to 32 printable characters. The default is null (an empty string).

4.6.1.2 Heading

The sector heading (the center angle of the sector), in degrees. The range is from 0 to 359.

The heading of an associated Sector cannot be changed. The default is 0.

4.6.1.3 Width

The planned sector coverage, in degrees. The range is from 0 to 359. The default is 0.

4.6.2 Sector Association

The sector association is defined automatically after completing proper definition of the BS. The Sector Association menu enables viewing the automatically defined sector association parameter. The sector is defined by the previously configured BS ID LSB.

The Sector Association includes two association entries, for each of the relevant AU ports. The parameters for each association are:

- Sector Association AU Port Number: 1 and 2

- Sector Association Id: 1
- Radio Number: 1 and 2
- Radio Port Number: 1
- Antenna Number: 1 (
- Antenna Port Number: 1 and 2

Note: Two vertical antennas are treated as one Antenna with 2 ports

4.7 BS Menu

The unit supports a single BS. The BS menu enables defining the BS, updating the BS parameters or deleting the BS (the BS ID LSB of an existing BS cannot be modified. To change the BS ID LSB, you must delete the BS and re-define it).

The BS menu includes two options:

- "Add"
- "Select"

4.7.1 Add

Select the Add option to define the BS. Only a single BS can be defined. You will be prompted to configure the following BS mandatory parameters:

4.7.1.1 BS ID LSB

The unique identifier of the BS in the network. A number in the range 1-16777215. The BS ID LSB used in the system is in the format A.B.C where A, B, C are from 0 to 255. The BS ID used in the Monitor program is an integer that is calculated by the formula A*65536+B*256+C. For example, a BS ID of 1.2.5 is translated to 1*65536+2*256+5=66053.

4.7.1.2 Operator ID

The unique identifier of the wireless network operator. The same Operator ID must be used by all BSs in the managed wireless network. A number in the range 1-16777215 (same definition principle as for BS ID LSB).

4.7.1.3 Center Frequency

The center of the frequency band in which the BS will transmit, in MHz. The valid values depend on the band supported by the device and the Bandwidth to be defined, are from f1+0.5BW to f2-0.5BW, where f1 is the lowest frequency of the radio band, f2 is the highest frequency of the band, and BW is the required bandwidth.

4.7.1.4 Bandwidth

The BS channel bandwidth (5 MHz, 7 MHz, 10MHz).

A bandwidth of 7 MHz is not applicable for units in the 2.x GHz bands.

4.7.1.5 Cell ID

The Cell ID (IDCell) used for preamble selection. The range is from 0 to 31.

4.7.1.6 Segment Number

The segment (BS) number in a three sector BS (0-2).

4.7.1.7 Total Uplink Duration

The total duration of the uplink in a frame, in slots (one slot equals 3 symbols).

To avoid BS-BS interference, the ul-dl-allocation must be identical in all BSs in a geographical region.

The range is 4-7 or 10 for bandwidth of 5 or 10MHz, 3-5 or 7 for bandwidth of 7MHz.

4.7.1.8 Major Group

The major groups allocated to the BS for maps transmission. Two hexadecimal digits in the range 00 to fc, representing 8 bits numbered 0 to 7 (left to right). Bits 0 to 5 indicate whether Subchannel Groups 0 to 5 (respectively) are allocated. Bits 6 and 7 are set to 0.

If BW=5 MHz, bits 1, 3 and 5 are not relevant ("don't care"). bits 0, 2, and 4 should be set. Major Group must be set to A8.

If BW=7/10 MHz with reuse 1, bits 0 to 5 must be set. The value must be set to fc.

For BW=7/10 MHz with Reuse 3:

- If Segment Number = 0, then bits #0 and 1 should be set. The value must be set to c0.
- If Segment Number = 1, then bits #2 and 3 should be set. The value must be set to 30.
- If Segment Number = 2, then bits #4 and 5 should be set. The value must be set to 0c.

4.7.1.9 Basic Map Repetition

The basic repetition used in the transmission of the maps using QPSK 1/2. The available options are 1, 2, 4 and 6. (1 means no repetitions).

4.7.1.10 DL Permutation Base

The permutation base used in the downlink data zone.

The valid range is from 0 to 31.

4.7.1.11 Permutation Base

The permutation base used in the uplink feedback zone.

The valid range is from 0 to 69.

4.7.1.12 UL Permutation Base

The permutation base used in the uplink data zone.

The valid range is from 0 to 69.

4.7.1.13 IP Address

The IP address of the bearer interface of the BS. Must be unique in the network. Must be in the same subnet with the unit's bearer interface.

4.7.1.14 IP Subnet Mask

The IP subnet mask of the bearer interface of the BS.

4.7.1.15 Default Gateway

The IP address of the default gateway of the bearer interface of the BS. Must be in the same subnet with the BS bearer IP Address.

4.7.1.16 Vlan ID

The VLAN ID of the bearer interface of the BS.

The range is 11-100, 110-4094. The default is 11.

4.7.1.17 Default Authenticator IP Address

The IP address of the default authenticator ASN GW.

4.7.1.18 Paging Group ID

The Paging Group ID of the BS.

The range is from 0 to 65535. 0 means that Idle Mode is not enabled. If Idle Mode is enabled (Paging Group ID is not 0), must be unique in the network (different Paging Group ID for each BS).

4.7.2 Select

Select the BS to view or update its parameters or to delete it. BS is selected by its BS ID LSB.

The selected BS menu includes the following options:

- "General"
- "Air Frame Structure Zones"
- "Mobility"
- "Power Control"
- "Feedback"
- "Air Frame Structure General"
- "Connectivity"
- "Management"
- "Keep Alive"
- "Scheduler"

4.7.2.1 General

The selected BS General parameters menu includes the following options:

- Show: Select to view the current values of the BS General parameters.
- Update: Select to update the configured values of the BS General parameters.
- Delete: Select to delete the BS (the BS ID LSB of an existing BS cannot be modified. To change it you must delete the BS and re-define it).

The BS General parameters are:

- "Operator ID"
- "Name"

- "Center Frequency"
- "Bandwidth"
- "Paging Group ID"

4.7.2.1.1 Operator ID

The unique identifier of the wireless network operator. The same Operator ID must be used by all BSs in the managed wireless network. A number in the range 1-16777215. The Operator ID used in the system is in the format A.B.C where A, B, C are from 0 to 255. The Operator used in the Monitor program is an integer that is calculated by the formula A*65536+B*256+C. For example, an Operator ID of 1.1.1is translated to 1*65536+1*256+1=65793.

4.7.2.1.2 Name

The name of the BS. An optional descriptive parameter. A string of up to 32 printable characters.

4.7.2.1.3 Center Frequency

The center of the frequency band in which the BS will transmit, in MHz. The valid values depend on the band supported by the device and the Bandwidth to be defined, are from f1+0.5BW to f2-0.5BW, where f1 is the lowest frequency of the radio band, f2 is the highest frequency of the band, and BW is the required bandwidth.

4.7.2.1.4 Bandwidth

The BS channel bandwidth (5 MHz, 7 MHz, 10MHz).

A bandwidth of 7 MHz is not applicable for units in the 2.x GHz bands.

4.7.2.1.5 Paging Group ID

The Paging Group ID of the BS.

The single sector Idle Mode capability provides the benefits of MS power savings and manageable total sector active and non active users, together with reduced overhead on the backhaul network.

Idle Mode (IM) mechanism allows an MS to become unavailable on the air interface, and thus freeing operational resources and preserving MS power. During IM operation, an MS switch off its transmission and reception capabilities, and becomes available for DL broadcast control messaging, i.e., MS Paging, in a periodically manner. Using paging broadcast, BS can indicate (if necessary) the MS to exit from IM and return into normal operation mode. The paging control message is sent over the DL of a set of BSs simultaneously. This set is called Paging group (PG). In the current release, each Paging Group includes a single BS.

During IM, MS performs location updates when moving from one PG to another. While in the same PG, MS does not need to transmit in the UL and can be paged in the DL if there is traffic targeted at it.

The range of the Paging Group ID parameter is from 0 to 65535. 0 means that Idle Mode is not enabled. If Idle Mode is enabled (Paging Group ID is not 0), must be unique in the network (different Paging Group ID for each BS).

4.7.2.2 Air Frame Structure Zones

The Air Frame Structure Zones menu includes the following options:

- "Uplink Data Zone"
- "Downlink Data Zone"
- "First Zone"
- "Uplink Feedback Zone"
- "Frame Structure Mode"

4.7.2.2.1 Uplink Data Zone

The Uplink Data Zone menu enables viewing/updating the values configured for the following parameters:

- "Uplink Basic Rate"
- "UL Permutation Base"

4.7.2.2.1.1 Uplink Basic Rate

The uplink basic rate:

- ctcQpskOneOverTwoTimesSix (QPSK 1/2 Repetition 6)
- ctcQpskOneOverTwoTimesFour (QPSK 1/2 Repetition 4)
- ctcQpskOneOverTwoTimesTwo (QPSK 1/2 Repetition 2)
- ctcQpskOneOverTwo (QPSK 1/2)
- ctcQpskThreeOverFour (QPSK 3/4)

- ctcQamSixteenOneOverTwo 16-QAM 1/2
- ctcQamSixteenThreeOverFour (16-QAM 3/4)
- ctcQamSixtyFourOneOverTwo (64-QAM 1/2)
- ctcQamSixtyFourTwoOverThree (64-QAM 2/3)
- ctcQamSixtyFourThreeOverFour (64-QAM 3/4)
- ctcQamSixtyFourFiveOverSix 64-QAM 5/6

The default is ctcQpskOneOverTwo (QPSK 1/2).

4.7.2.2.1.2 UL Permutation Base

The permutation base used in the uplink data zone.

The valid range is from 0 to 69.

4.7.2.2.2 Downlink Data Zone

The Downlink Data Zone menu enables viewing/updating the values configured for the following parameters:

- "Basic Rate for Management"
- "Basic Rate for Data"
- "DL Permutation Base"

4.7.2.2.2.1 Basic Rate for Management

The downlink basic rate for unicast and broadcast management:

- ctcQpskOneOverTwoTimesSix (QPSK 1/2 Repetition 6)
- ctcQpskOneOverTwoTimesFour (QPSK 1/2 Repetition 4)
- ctcQpskOneOverTwoTimesTwo (QPSK 1/2 Repetition 2)
- ctcQpskOneOverTwo (QPSK 1/2)
- ctcQpskThreeOverFour (QPSK 3/4)
- ctcQamSixteenOneOverTwo 16-QAM 1/2

- ctcQamSixteenThreeOverFour (16-QAM 3/4)
- ctcQamSixtyFourOneOverTwo (64-QAM 1/2)
- ctcQamSixtyFourTwoOverThree (64-QAM 2/3)
- ctcQamSixtyFourThreeOverFour (64-QAM 3/4)
- ctcQamSixtyFourFiveOverSix 64-QAM 5/6

The default is ctcQpskOneOverTwo (QPSK 1/2).

4.7.2.2.2.2 Basic Rate for Data

The downlink basic rate for data:

- ctcQpskOneOverTwoTimesSix (QPSK 1/2 Repetition 6)
- ctcQpskOneOverTwoTimesFour (QPSK 1/2 Repetition 4)
- ctcQpskOneOverTwoTimesTwo (QPSK 1/2 Repetition 2)
- ctcQpskOneOverTwo (QPSK 1/2)
- ctcQpskThreeOverFour (QPSK 3/4)
- ctcQamSixteenOneOverTwo 16-QAM 1/2
- ctcQamSixteenThreeOverFour (16-QAM 3/4)
- ctcQamSixtyFourOneOverTwo (64-QAM 1/2)
- ctcQamSixtyFourTwoOverThree (64-QAM 2/3)
- ctcQamSixtyFourThreeOverFour (64-QAM 3/4)
- ctcQamSixtyFourFiveOverSix 64-QAM 5/6

The default is ctcQpskOneOverTwo (QPSK 1/2).

4.7.2.2.2.3 DL Permutation Base

The permutation base used in the downlink data zone.

The valid range is from 0 to 31.

4.7.2.2.3 First Zone

The First Zone menu enables viewing/updating the values configured for the following parameters:

- “Major Group”
- “Basic Map Repetition”
- “Minimum Size”
- “Maximum Size”
- “Maximum Map Size”

4.7.2.2.3.1 Major Group

The major groups allocated to the BS for maps transmission. Two hexadecimal digits in the range 00 to fc, representing 8 bits numbered 0 to 7 (left to right). Bits 0 to 5 indicate whether Subchannel Groups 0 to 5 (respectively) are allocated. Bits 6 and 7 are set to 0.

If BW=5 MHz, bits 1, 3 and 5 are not relevant ("don't care"). bits 0, 2, and 4 should be set. Major Group must be set to A8.

If BW=7/10 MHz with reuse 1, bits 0 to 5 must be set. The value must be set to fc.

For BW=7/10 MHz with Reuse 3:

- If Segment Number = 0, then bits #0 and 1 should be set. The value must be set to c0.
- If Segment Number = 1, then bits #2 and 3 should be set. The value must be set to 30.
- If Segment Number = 2, then bits #4 and 5 should be set. The value must be set to 0c.

4.7.2.2.3.2 Basic Map Repetition

The basic repetition used in the transmission of the maps using QPSK 1/2. The available options are 1, 2, 4 and 6. (1 means no repetitions).

The default is 6 (rate QPSK 1/2 repetition 6)

4.7.2.2.3.3 Minimum Size

The initial size (in symbols) of the first zone. When reuse 3 is used within first zone, this parameter should be equal across all BSs within deployment.

The available options are 2, 4,....34 (2xN where N=1-17) or No Limitation. The default is No Limitation.

See limitations in "First Zone Minimum Size Recommended Value Range" table below. Other values should be avoided.

In the current release this is the actual first zone size. For reuse 1 the default (no limitation) can be used-the actual size will be set dynamically according to the configuration. For reuse 3 a specific value must be configured.

4.7.2.2.3.4 Maximum Size

Maximum size (in symbols) for first zone. Used mainly for performance control capability within frame.

The available options are 2, 4,....34 (2xN where N=1-17) or No Limitation. The default is No Limitation.

Maximum Size cannot be lower than Minimum Size.

In the current release this parameter is not applicable (first zone size is defined only by the Minimum Size parameter).

Recommended values for First Zone Minimum Size and Maximum Size:

Table 4-2: First Zone Minimum Size Recommended Value Range

Bandwidth (MHz)	First Zone Scheme*	Basic Map Repetition	Minimum Size (symbols) (up to a maximum of Y as defined below)
7/10	Full Loading	6	No Limitation or 8+2N
		4	No Limitation or 6+2N
		2	No Limitation or 4+2N
		1	No Limitation or 4+2N
	Reuse 1/3	6	N/A (non trivial configuration)
		4	8+2N
		2	6+2N
		1	6+2N
5 MHz	Full Loading	6	N/A (non trivial configuration)
		4	No Limitation or 8+2N
		2	No Limitation or 6+2N
		1	No Limitation or 4+2N
	Reuse 1/3	6	N/A (non trivial configuration)
		4	N/A (non trivial configuration)
		2	N/A (non trivial configuration)
		1	N/A (non trivial configuration)

* First Zone Scheme is being determined by the selected Map Major Groups:

- For 7/10 MHz Full Loading means all Major Groups (0-5) are selected.
- For 5MHz Full Loading means that all relevant Major Groups (0, 2, 4) are selected.

For First Zone Maximum Size the values are:

- If First Zone Minimum Size is set to No Limitations, the value range for Maximum Size is the same as for Minimum Size.
- Else, the value range is No Limitations or First Zone Minimum Size+2N, up to a maximum of Y as defined below.

The value of Y that sets the upper limit for the Minimum and Maximum Size parameters depends on the Maximum Cell Radius and Total Uplink Duration parameters, using the following formula:

Y=A-3*(Total Uplink Duration)-(Extra TTG),
where A=46 for BW of 5 or 10 MHz, and 32 for BW of 7 MHz.

Table 4-3: Calculating the Upper Limit Value (Y) for Minimum and Maximum Size

Bandwidth (MHz)	Maximum Cell Radius	Total Uplink Duration (slots)	Extra TTG (symbols)
5/10	1, 2, 4, 8	4, 6	0
	1, 2, 4, 8, 15, 23	5, 7	1
	15, 23, 30	4, 6	2
	30	5, 7	3
7	1, 2, 4, 8, 15, 23	4	0
	1, 2, 4, 8, 15, 23, 30	3, 5	1
	30	4	2

4.7.2.2.3.5 Maximum Map Size

Limits the maximum size of maps (in slots).

The available options are 10, 20 ...300 (10xN where N=1-30) or No Limitation. The default is No Limitation.

4.7.2.2.4 Uplink Feedback Zone

The Uplink Feedback Zone menu enables viewing/updating the values configured for the following parameter:

4.7.2.2.4.1 Permutation Base

The permutation base used in the uplink feedback zone.

The valid range is from 0 to 69.

4.7.2.2.5 Frame Structure Mode

The Frame Structure Mode menu enables viewing/updating the values configured for the following parameter:

4.7.2.2.5.1 RCID Usage

Each transmitted MAP includes allocations for each MS it served, using the MS's CID for identifying each MS. The original CID includes 16 bits, which is significantly more than practically needed since a maximum of 500 MSs can be served by each BS. To reduce overhead, a smaller number of bits can be used, based on RCID (Reduced CID) defined in the standard. This mechanism can be

used only if all MSs served by the BS support RCID. When enabled, CIDs of either 7 or 11 bits will be dynamically used, according to the current number of MS served at each given moment.

The RCID Usage defines whether RCID is enabled or disabled. The default is Disable.

4.7.2.3 Mobility

The Mobility menu enables viewing/updating the values configured for the following parameter:

4.7.2.3.1 Deployment

The type of deployment in the area served by the BS: Fix or Mobile. To support proper handover, should be set to Fix only if mobile MSs are not expected. The default is Fix.

4.7.2.4 Power Control

The Power Control menu enables viewing/updating the values configured for the following parameters:

- “Target Ni”
- “Required C/N Levels - ACK”
- “Required C/N Levels - CQI”
- “Required C/N Levels - CDMA”
- “Required C/N Levels - QPSK 1/2”
- “Required C/N Levels - QPSK 3/4”
- “Required C/N Levels -16-QAM 1/2”
- “Required C/N Levels - 16-QAM 3/4”
- “Required C/N Levels - 64-QAM 1/2”
- “Required C/N Levels - 64-QAM 2/3”
- “Required C/N Levels -64-QAM 3/4”

- "Required C/N Levels - 64-QAM 5/6"
- "Allowed Interference Level"

4.7.2.4.1 Target Ni

The target noise and interference level for the PUSC zone, in dBm.

The range is from -130 to -110 in steps of 1 (dBm). The default is -127.

4.7.2.4.2 Required C/N Levels - ACK

The C/N in dB required for sending ACK, reported to the MS for power control purposes.

The range is from -20 to 50 (dB). The default is 7.

4.7.2.4.3 Required C/N Levels - CQI

The C/N in dB required for sending CQI, reported to the MS for power control purposes.

The range is from -20 to 50 (dB).

Must be in the range from Required C/N Levels - ACK - 8 to Required C/N Levels - ACK + 7. The default is 12.

4.7.2.4.4 Required C/N Levels - CDMA

The C/N in dB required for transmitting CDMA, reported to the MS for power control purposes.

The range is from -20 to 50 (dB).

Must be in the range from Required C/N Levels - CQI - 8 to Required C/N Levels - CQI + 7. The default is 9.

4.7.2.4.5 Required C/N Levels - QPSK 1/2

The C/N in dB required for sending QPSK 1/2, reported to the MS for power control purposes.

The range is from -20 to 50 (dB).

Must be in the range from Required C/N Levels - CDMA - 16 to Required C/N Levels - CDMA + 14. The default is 13.

4.7.2.4.6 Required C/N Levels - QPSK 3/4

The C/N in dB required for sending QPSK 3/4, reported to the MS for power control purposes.

The range is from -20 to 50 (dB).

Must be in the range from Required C/N Levels - QPSK 1/2 - 16 to Required C/N Levels - QPSK 1/2 + 14. The default is 16.

4.7.2.4.7 Required C/N Levels -16-QAM 1/2

The C/N in dB required for transmitting 16-QAM 1/2, reported to the MS for power control purposes.

The range is from -20 to 50 (dB).

Must be in the range from Required C/N Levels - QPSK 3/4 - 8 to Required C/N Levels - QPSK 3/4 + 7. The default is 19.

4.7.2.4.8 Required C/N Levels - 16-QAM 3/4

The C/N in dB required for sending 16-QAM 3/4, reported to the MS for power control purposes.

The range is from -20 to 50 (dB).

Must be in the range from Required C/N Levels - 16-QAM 1/2 - 16 to Required C/N Levels - 16-QAM 1/2 + 14. The default is 22.

4.7.2.4.9 Required C/N Levels - 64-QAM 1/2

The C/N in dB required for sending 64-QAM 1/2, reported to the MS for power control purposes.

The range is from -20 to 50 (dB).

Must be in the range from Required C/N Levels - 16-QAM 3/4 - 16 to Required C/N Levels - 16-QAM 3/4 + 14. The default is 23.

4.7.2.4.10 Required C/N Levels - 64-QAM 2/3

The C/N in dB required for sending 64-QAM 2/3, reported to the MS for power control purposes.

The range is from -20 to 50 (dB).

Must be in the range from Required C/N Levels - 64-QAM 1/2 - 8 to Required C/N Levels - 64-QAM 1/2 + 7. The default is 25.

4.7.2.4.11 Required C/N Levels -64-QAM 3/4

The C/N in dB required for sending 64-QAM 2/3, reported to the MS for power control purposes.

The range is from -20 to 50 (dB).

Must be in the range from Required C/N Levels - 64-QAM 2/3 - 8 to Required C/N Levels - 64-QAM 2/3 + 7. The default is 26.

4.7.2.4.12 Required C/N Levels - 64-QAM 5/6

The C/N in dB required for transmitting 64-QAM 5/6, reported to the MS for power control purposes.

The range is from -20 to 50 (dB).

Must be in the range from Required C/N Levels - 64-QAM 3/4 - 8 to Required C/N Levels - 64-QAM 3/4 + 7. The default is 28.

4.7.2.4.13 Allowed Interference Level

This parameter defines the correction of maximum allowed UL SINR based on measured DL SINR.

The options are Very High, High, Medium, Low.

The default is High.

4.7.2.5 Feedback

The Feedback menu enables viewing/updating the values configured for the following parameters:

- "IR CDMA Allocations Period"
- "Start of Ranging Codes Used"
- "Maximum Cell Radius"

4.7.2.5.1 IR CDMA Allocations Period

The period of IR CDMA allocations, in frames.

The available options are 1, 2, 4, 6, 8, 10. The default is 2.

In the current release the actual value is always 2 (the configured value is ignored).

4.7.2.5.2 Start of Ranging Codes Used

The starting number of the group of codes used for the uplink.

The available options are 0, 64, 128, 192. The default is 0.

4.7.2.5.3 Maximum Cell Radius

The maximum cell radius (in km).

The available values are 1, 2, 4, 8, 15, 23. 30. The default is 2.

4.7.2.6 Air Frame Structure General

The Air Frame Structure General menu enables viewing/updating the values configured for the following parameters:

- "Cell ID"
- "Preamble Group"
- "Segment Number"
- "Preamble Index"
- "Total Uplink Duration"
- "Operational Status Channel 1"
- "Operational Status Channel 2"
- "Neighbor with Beamforming"

4.7.2.6.1 Cell ID

The Cell ID (IDCell) used for preamble selection. The range is from 0 to 31.

4.7.2.6.2 Preamble Group

The preamble group (1 or 2). A value of 2 is applicable only for the following combinations of Segment Number and Cell ID values:

Segment Number=0, Cell ID=0, 3, 6, 9, 12, 15.

Segment Number=1, Cell ID=1, 4, 7, 10, 13, 16.

Segment Number=2, Cell ID=2, 5, 8, 11, 14, 17

The default is 1.

4.7.2.6.3 Segment Number

The segment (BS) number in a three sector BS (0-2).

4.7.2.6.4 Preamble Index

Read-only. The Preamble Index used by the BS (0-113).

4.7.2.6.5 Total Uplink Duration

The total duration of the uplink in a frame, in slots (one slot equals 3 symbols).

To avoid BS-BS interference, the ul-dl-allocation must be identical in all BSs in a geographical region.

The range is 4-7 or 10 for bandwidth of 5 or 10MHz, 3-5 or 7 for bandwidth of 7MHz.

4.7.2.6.6 Operational Status Channel 1

Read-only. The operational status of Channel 1.

4.7.2.6.7 Operational Status Channel 2

Read-only. The operational status of Channel 2.

4.7.2.6.8 Neighbor with Beamforming

The beam forming mechanism that may be used by neighboring BSs is based on symmetry in performance between uplink and down link. To compensate for possible differences due to HW of the ODU, a special low-level calibration signal is transmitted periodically in each link. During the time this calibration signal is transmitted all other radio links of the same BS and all its neighbors should not transmit, to reduce potential interference. The Beam Forming mechanism ensures that all neighboring BSs operating in Beam Forming mode will enter into silent mode when necessary. A Micro BTS operating in Matrix A or B mode should enter into silent mode when necessary (based on frame number information) only if it has neighboring BSs operating in Beam Forming mode.

The options are Yes and No. Set to Yes only if the unit has at least one neighbor BS operating in Beam Forming mode.

The default is No.

4.7.2.7 Connectivity

The Connectivity menu includes the following options:

- “Bearer Interface”
- “Authentication”
- “QOS Marking Rules”
- “ASN-GW Load Balancing”

4.7.2.7.1 Bearer Interface

The Bearer Interface menu enables viewing/updating the values configured for the following parameters:

- "IP Address"
- "IP Subnet Mask"
- "Default Gateway"
- "Vlan ID"
- "Default Gateway Connectivity Status"

4.7.2.7.1.1 IP Address

The IP address of the bearer interface of the BS. Must be unique in the network. Should be in the same subnet, together with the unit's bearer interface.

4.7.2.7.1.2 IP Subnet Mask

The IP subnet mask of the bearer interface of the BS.

4.7.2.7.1.3 Default Gateway

The IP address of the default gateway of the bearer interface of the BS. Must be in the same subnet with the BS bearer IP Address.

4.7.2.7.1.4 Vlan ID

The VLAN ID of the bearer interface of the BS. The range is 11-100, 110-4094.

4.7.2.7.1.5 Default Gateway Connectivity Status

Read-only. The status of connectivity with the default authenticator: Unknown, Up, down. The keep-alive mechanism starts only after first registration at the ASN-GW. Until then this mechanism is disable and connectivity status is Unknown.

4.7.2.7.2 Authentication

The Authentication menu enables viewing/updating the values configured for the following parameters:

- "Default Authenticator IP Address"
- "Thresholds - Suspended EAP Process"
- "Threshold - Active MSs"
- "Threshold - Maximum EAP Rounds"

4.7.2.7.2.1 Default Authenticator IP Address

The IP address of the default authenticator ASN GW.

4.7.2.7.2.2 Thresholds - Suspended EAP Process

Suspended EAP authentication process threshold. It is used to set an alarm.

The range is 0-10000. The default is 10000.

Note: The relevant alarm is not supported in current release.

4.7.2.7.2.3 Threshold - Active MSs

The threshold for the number of MSs in active operation state (not Idle) served by the BS. Exceeding this threshold sets the alarm “Excessive MS number”.

The range is 0-1024. When set to 0, the alarm is disabled. The default is 1024.

4.7.2.7.2.4 Threshold - Maximum EAP Rounds

The threshold for the number of EAP rounds in one direction in the same EAP session. When this threshold is exceeded, alarm is set. This threshold may be used to protect the system from hazard EAP sessions with extreme number of messaging round trips.

The range is 0-100. When set to 0, the alarm is disabled. The default is 100.

Note: The relevant alarm is not supported in current release.

4.7.2.7.3 QOS Marking Rules

The QoS Marking Rules menu includes the following options:

- “Internal ASN Traffic QOS Rules”
- “Internal Management Traffic QOS Rules”
- “QOS Rules”

4.7.2.7.3.1 Internal ASN Traffic QOS Rules

The Internal ASN Traffic QOS Rules menu enables viewing/updating the values configured for the following parameters:

- “Diffserv Code Point”
- “802.1p Priority”

4.7.2.7.3.1.1 Diffserv Code Point

DSCP priority value to be used for marking of intra-ASN (R8/R6) traffic. The range is 0-63. The default is 0.

4.7.2.7.3.1.2 802.1p Priority

802.1p priority value to be used for marking of intra-ASN (R8/R6) traffic. The range is 0-7. The default is 0.

4.7.2.7.3.2 Internal Management Traffic QOS Rules

The Internal Management Traffic QOS Rules menu enables viewing/updating the values configured for the following parameters:

- "Diffserv Code Point"
- "802.1p Priority"

4.7.2.7.3.2.1 Diffserv Code Point

DSCP priority value to be used for marking of internal management traffic. The range is 0-63. The default is 0.

4.7.2.7.3.2.2 802.1p Priority

802.1p priority value to be used for marking of internal management traffic. The range is 0-7. The default is 0.

4.7.2.7.3.3 QOS Rules

The QOS Rules menu includes the following options:

- Show: Use the Show option to view the main parameters (Rule Status, Marking Rule Name, Service Flow Data Delivery Type, Service Flow Traffic Priority) of each of the existing QoS Rules.
- Add: Use the Add option to add a new QoS Rule.
- Select: Use the Select option to select a specific QoS Rule. You can than select one of the following:
  - » Use the Show option to view all parameters of the selected rule.
  - » Use the Update option to update one or several parameters of the selected rule.
  - » Use the Delete option to remove the selected rule from the database.

The QOS Rule parameters are:

4.7.2.7.3.3.1 Rule Number

The index number of the rule. A number in the range 1-16383.

4.7.2.7.3.3.2 Rule Status

The status of the rule (Enable or Disable).

4.7.2.7.3.3.3 Marking Rule Name

The name of the QoS Marking Rule. An optional s string of up to 32 characters.

4.7.2.7.3.3.4 Service Flow Data Delivery Type

The Service Flow Type for data delivery services: ugs, rtvr, nrtvr, be, ertvr, or ANY.

4.7.2.7.3.3.5 Service Flow Traffic Priority

The priority of Service Flow traffic. 0-7 or ANY (255).

4.7.2.7.3.3.6 Service Flow Media FlowType

The Service Flow Media Flow Type, as defined in ASN-GW or AAA server

4.7.2.7.3.3.7 Enable Service Flow Media Flow Type

Indicates whether the condition for Service Flow Media Flow Type is enabled or disabled. If true, the Service Flow Media Flow Type will be considered. when looking for a match.

4.7.2.7.3.3.8 Outer DSCP Marking

The DSCP value to be used for marking the outer IP header (IP/GRE). The range is 0-63.

4.7.2.7.3.3.9 802.1p Priority Marking

The 802.1p priority to be used for marking traffic. The range is 0-7.

4.7.2.7.4 ASN-GW Load Balancing

At the BTS level, up to two pools (with different priorities), each with up to 10 ASN-GWs, can be defined (see “ASN-GW Load Balancing Pools” on page 695). The BS will “inherit” these pools. It should be noted the ASN-GW defined in the BS as the Default Authenticator will be automatically added to the Primary Pool that is the higher priority pool (although it will not be shown as belonging to the pool).

At the BS level, you can enable/disable the use of each of the two pools. The Secondary Pool can be enabled only if the Primary Pool is enabled. Note that if both pools are disabled, or if the enabled pool(s) are empty, the ASN-GW load balancing feature is disabled and only the Default Authenticator will be used.

The ASN-GW Load Balancing menu includes the following options:

- “Pools Availability”

- "Primary Pool"
- "Secondary Pool"

4.7.2.7.4.1 Pools Availability

The Pools Availability option enables viewing/updating the status (Enabled/Disabled) of each of the pools. The Secondary Pool can be enabled only if the Primary Pool is enabled.

4.7.2.7.4.2 Primary Pool

The Primary Pool option enables viewing the IP Address and current Connectivity Status for each of the ASN-GWs in the pool, based on selection of the ASN-GW Index.

4.7.2.7.4.3 Secondary Pool

The Secondary Pool option enables viewing the IP Address and current Connectivity Status for each of the ASN-GWs in the pool, based on selection of the ASN-GW Index.

4.7.2.8 Management

The Management menu includes the following options:

- "Noise and Interference Level Thresholds"
- "DL Dropped Packets Ratio Thresholds"

4.7.2.8.1 Noise and Interference Level Thresholds

The Noise and Interference Level Thresholds menu enables viewing/updating the values configured for the following parameter:

4.7.2.8.1.1 Uplink Median Noise

The uplink median noise level represents the median value of the noise floor histogram. If the uplink median noise level exceeds this value, an excessive uplink median noise alarm will be generated.

The value is in dBm/tone. The default value of -124 is set to 3 dB above the default value of the Target NI parameter.

The range is from -135 to -100 (dBm)

4.7.2.8.2 DL Dropped Packets Ratio Thresholds

The DL Dropped Packets Ratio Thresholds menu enables viewing/updating the values configured for the following parameters:

- "Best Effort"
- "RT-VR"
- "NRT-VR"
- "UGS"
- "ERT-VR"

4.7.2.8.2.1 Best Effort

The threshold for excessive DL dropped packets ratio (in promils), of DL packets in all Best Effort services, which when exceeded triggers a Best Effort service alarm.

The range is from 1 to 1000 (promil). The default is 1000.

4.7.2.8.2.2 RT-VR

The threshold for excessive DL dropped packets ratio (in promils), of DL packets in all RT-VR services, which when exceeded triggers an RT-VR service alarm.

The range is from 1 to 1000 (promil). The default is 1000.

4.7.2.8.2.3 NRT-VR

The threshold for excessive DL dropped packets ratio (in promils), of DL packets in all NRT-VR services, which when exceeded triggers an NRT-VR service alarm.

The range is from 1 to 1000 (promil). The default is 1000.

4.7.2.8.2.4 UGS

The threshold for excessive DL dropped packets ratio (in promils), of DL packets in all UGS services, which when exceeded triggers a UGS service alarm.

The range is from 1 to 1000 (promil). The default is 1000.

4.7.2.8.2.5 ERT-VR

The threshold for excessive DL dropped packets ratio (in promils), of DL packets in all ERT-VR services, which when exceeded triggers an ERT-VR service alarm.

The range is from 1 to 1000 (promil). The default is 1000.

4.7.2.9 Keep Alive

The Keep Alive menu enables viewing/updating the values configured for the following parameters:

- "Enable Keep Alive"

- "Keep Alive Period"
- "Polling Period"
- "Number of Retransmissions"

4.7.2.9.1 Enable Keep Alive

Enable/disable the keep-alive mechanism. The default is Disable.

The following parameters are applicable only if Keep Alive is enabled.

4.7.2.9.2 Keep Alive Period

Time in milliseconds to wait for a response before initiating another polling attempt or reaching a decision that the polled entity has failed (if the maximum number of retries set by Number of Retransmissions has been reached).

The range is from 100 to 10000 milliseconds (0.1 to 10 second). The default is 5000.

4.7.2.9.3 Polling Period

The period in seconds between polling sessions.

The range is from 10 to 1000 seconds. The default is 60 seconds.

Polling Period x 1000 (value in milliseconds) cannot be lower than Keep Alive Period x (Number of Retransmissions+1)

4.7.2.9.4 Number of Retransmissions

Maximum number of retries if Retransmission Timeout has expired without getting a response.

The range is from 0 to 10. The default is 5.

4.7.2.10 Scheduler

Scheduling uncommitted (above the maximum reserved rate) traffic can be done using one of the following options:

- Equal Time (ET) scheduling mode, in which air resources are being scheduled in a fair manner proportional to the users' excess traffic (maximum sustained rate - maximum reserved rate) SLAs.
- Equal Rate (ER) scheduling mode, in which air resources are allocated to users aiming at ensuring data rate fairness between users proportional to their excess traffic SLAs.

Assuming a sector with diversity (different channels conditions) of active users, ET scheme enables higher aggregate sector throughput at the expense of data-rate fairness among users, while ER scheduling scheme ensures maximum data-rate fairness among users at the expense of lower aggregate sector throughput.

Using ER scheduling scheme exposes the system to excessive allocation of air resources to highly active users having relatively poorer channel conditions. To ensure data-rate fairness, more resources will to be allocated to these users compared to users with relatively good channel conditions. The effect of a small number of such users within the sector will be reflected by reduced aggregate sector throughput as well as degradation of achievable rates for all users.

To protect against “abusing” users, an instantaneous rate threshold can be defined within the scheduling scheme in which the amount of air resources for users with continuous instantaneous rate below the threshold is being limited. The more the abusing users' instantaneous rate is below the threshold, the more resource allocations limitation is applied.

Three levels of dynamic protection are available:

- No protection.
- Low protection level - Protection against users with very poor channel conditions. Should be used where the abusing users instantaneous rates are far below the average instantaneous rate within the sector.
- Medium protection - Protection against users with relatively poor or very poor channel conditions. Should be used where the abusing users instantaneous rates are below or far below the average instantaneous rate within sector.

A dynamic protection mechanism is implemented, in which the mechanism of limiting resource allocations is automatically and dynamically activated when needed.

The Scheduler menu enables viewing/updating the values configured for the following parameters:

- “Scheduler Mode”
- “Scheduler DL Abuse Protection Level”
- “Scheduler UL Abuse Protection Level”

4.7.2.10.1 Scheduler Mode

The basis for allocating excess bandwidth among relevant users:

- Equal Rate: Throughput Fairness
- Equal Time: Resource Fairness

The selected mode is applicable for both uplink and downlink schedulers.

The default is Equal Rate.

4.7.2.10.2 Scheduler DL Abuse Protection Level

Applicable only if the selected Scheduler Mode is Equal Rate.

- None: No Protection
- Low: Limit the DL resources allocated to MSs with very low DL transmission Rate.
- Medium: Limit the DL resources allocated to MSs with low and very low DL transmission Rate.

The default is None.

4.7.2.10.3 Scheduler UL Abuse Protection Level

Applicable only if the selected Scheduler Mode is Equal Rate.

- None: No Protection
- Low: Limit the UL resources allocated to MSs with very low UL transmission Rate.
- Medium: Limit the UL resources allocated to MSs with low and very low UL transmission Rate.

The default is None.

4.8 Equipment Menu

The Equipment menu includes the following options:

- "AU"
- "Radio"
- "Antenna"

4.8.1 AU

The AU menu includes the following options:

- "General"
- "Control"

4.8.1.1 General

The AU General menu enables viewing the general AU properties and status and updating the Required AU Type.

4.8.1.1.1 Required AU Type

Read-only according to the HW of the unit. In the current release the only supported AU Type is auMicroOdu2x2 (5).

4.8.1.1.2 AU Installed

Read-only. An indication of AU existence.

4.8.1.1.3 Installed AU Type

Read-only. The detected AU Type.

4.8.1.1.4 HW Version

Read-only. The HW Version of the AU card.

4.8.1.1.5 HW Revision

Read-only. The HW Revision of the AU card.

4.8.1.1.6 Serial Number

Read-only. The Serial Number of the AU card.

4.8.1.1.7 Boot SW Version

Read-only. The Boot SW Version of the AU card.

4.8.1.1.8 Health

Read-only. The health status of the AU card.

4.8.1.1.9 AU MAC Address

Read-only. The primary MAC address of the AU card.

4.8.1.1.10 AU MAC Address Secondary

Read-only. The secondary MAC address of the AU card.

4.8.1.2 Control

The AU Control menu includes the following parameter:

4.8.1.2.1 Shutdown Power Port 1

This parameter can be used to shutdown power to port 1 of the radio. The default status is normal operation (no shutdown).

4.8.1.2.2 Shutdown Power Port 2

This parameter can be used to shutdown power to port 2 of the radio. The default status is normal operation (no shutdown).

4.8.1.2.3 Last Reset Reason

Read-only. The reason for the last reset of the AU. Possible reasons include Unknown, Health Monitoring Failed, User Initiated. Configuration Failure, Internal Errors.

4.8.2 Radio

The Radio menu includes the following options for each of the two radios (1 and 2):

- “General”
- “Port”

4.8.2.1 General

The Radio General menu enables viewing the general radio properties and status and viewing/updating some general parameters.

4.8.2.1.1 Required Radio Type

The required radio type is set automatically to the value of the actual (installed) radio type.

Radio Type is in the format oDUAAAABBBBZZZWPPRbyTCOu, where:

AAAA = Lower bound of frequency band in MHz, rounded up to the nearest integer.

BBBB = Upper bound of frequency band in MHz, rounded down.

ZZZ = always 000 in TDD systems.

W = always N in TDD systems.

PP = maximum transmit power in dBm, rounded down.

R = number of receive channels.

T = number of transmit channels.

C = Y if cavity filter or a gap in the band is present, N if not.

O = Reserved (0).

u = Indication of a Micro BTS Radio

4.8.2.1.2 Required Frequency Band

Read-only. The frequency band according to the properties defined by the required radio type.

4.8.2.1.3 Required Maximum TX Power

Read-only. The maximum Tx power according to the properties defined by the required radio type.

4.8.2.1.4 Required Port Configuration

Read-only. The port configuration according to the properties defined by the required radio type.

4.8.2.1.5 Installed Radio Type

Read-only. The actually installed radio type. Available only after completing proper creation of the BS (including a Center Frequency in the correct range) and configuring a proper value for the Port's Tx Power parameter. The Serial Number and the values of the Port's read-only parameters are available only after detecting the Installed Radio Type.

4.8.2.1.6 Installed Frequency Band

Read-only. The frequency band according to the properties defined by the installed radio type.

4.8.2.1.7 Required Maximum TX Power

Read-only. The maximum Tx power according to the properties defined by the installed radio type.

4.8.2.1.8 Required Port Configuration

Read-only. The port configuration according to the properties defined by the installed radio type.

4.8.2.1.9 Serial Number

Read-only. The serial number of the radio card.

4.8.2.2 Port

The Radio Port menu enables viewing the general radio port properties and status and viewing/updating some general parameters.

4.8.2.2.1 TX Power

The required Tx power at the radio port, in dBm.

The actually available range depends on Radio Type: The upper limit, which is the default, is set by the Maximum Tx Power supported by the radio. The control range is 10 dBm.

4.8.2.2.2 HW Revision

Read-only. The HW revision of the radio port card.

4.8.2.2.3 HPA Card

Read-only. An indication whether an HPA (High Power Amplifier) card in installed.

4.8.2.2.4 HPA HW Version

Read-only. Applicable only if HPA card is installed. The HW version of the HPA card.

4.8.2.2.5 Serial Number

Read-only. The serial number of the radio port card.

4.8.2.2.6 RSSI

Read-only. Average uplink RSSI in dBm of all bursts of all connected MSs.

4.8.3 Antenna

Typically a 2-ports dual slant antenna is used. In cases where 2 separate antennas are used, the Antenna parameters are applicable for both antennas.

The Antenna menu enables viewing/updating the following parameters:

4.8.3.1 Antenna Type

An optional descriptive text. Up to 254 characters.

4.8.3.2 Mechanical Down Tilt

The downwards mechanical tilt of the antenna (in degrees) as opposed to the electrical tilt already integrated in the antenna (and thus taken as reference; instead of the horizontal plane). The range is from -90.0 to 90.0 using 0.1 degree resolution. Used only for information (inventory) purposes. The default is 0.

4.8.3.3 Electrical Down Tilt

The downwards electrical tilt of the antenna, in degrees. The range is from -90.0 to 90.0 using 0.1 degree resolution. Used only for information (inventory) purposes. The default is 0.

4.8.3.4 Longitude

The longitude of the antenna. The format is lll.mmm,a: lll.is longitude in degrees (between 000 to 179); mmm is in minutes (between 000 and 999); a - is E (east) or W (west) Used only for information (inventory) purposes. The default is 000.000,E.

4.8.3.5 Latitude

The latitude of the antenna. The format is ll.mmm,a: ll.is longitude in degrees (between 00 to 89); mmm is in minutes (between 000 and 999); a - is S (south) or N (north). Used only for information (inventory) purposes. The default is 00.000,N.

4.8.3.6 Tower Height

The height of the antenna above the ground in meters. The range is from 0 to 500. Used only for information (inventory) purposes. The default is 0.

4.8.3.7 Heading

The the azimuth angle (in degrees) between the center of the horizontal antenna beamwidth and the true north; counting clockwise.The range is from 0 to 359. Used only for information (inventory) purposes. The default is 0.

4.8.3.8 Cable Loss

The attenuation (in dB) of the cable between the ODU port and antenna port. The range is from 0 to 20 in 0.1 dB steps. Used only for information (inventory) purposes. The default is 0.5.

4.8.3.9 Antenna Product Type

The antenna type. The available options includes a list of default and standard antennas. The default is default1portV.

4.9 GPS Menu

The GPS menu includes the following options:

- "General Configuration"
- "Inventory & Statuses"

4.9.1 General Configuration

The GPS General Configuration menu enables viewing/updating the following parameters:

4.9.1.1 GPS Type

The type of time synchronization source to be used. The currently available options are None and Trimble Lassen.

The default is None,

4.9.1.2 Longitude

The longitude of the site. The format is lll.mmm,a: lll.is longitude in degrees (between 000 to 179); mmm is in minutes (between 000 and 999); a - is E (east) or W (west). The default is 000.000,E.

Configurable only if GPS Type set to None. Otherwise they are read-only, displaying the value calculated by the GPS receiver.

4.9.1.3 Latitude

The latitude of the site. The format is ll.mmm,a: ll.is latitude in degrees (between 00 to 89); mmm is in minutes (between 000 and 999); a - is N (north) or S (south). The default is 00.000,N.

Configurable only if GPS Type set to None. Otherwise they are read-only, displaying the value calculated by the GPS receiver.

4.9.1.4 Altitude

The altitude in meters of the site in meters, from -300.0 to 9000.0. The default is 0.

Configurable only if GPS Type set to None. Otherwise they are read-only, displaying the value calculated by the GPS receiver.

4.9.1.5 UTC Time and Date

The UTC (Coordinated Universal Time) date and time. Configurable only if the GPS Type is set to None. Otherwise it is the read-only data received from the GPS receiver.

The format is hh: mm: ss, dd/mm/yyyy

hh between 0 and 23, mm between 0 and 59, ss between 0 and 59, dd/mm with usual date and month rules, yyyy between 2006 to 9999.

4.9.1.6 Hold Over Passed Timeout

Applicable only if a GPS receiver is used. Defines the period, in minutes, for which the device provides holdover when the GPS loses synchronization with its satellites.

The range is from 0 to 2880 minutes. The default is 480 minutes.

4.9.1.7 Stop TX After Hold Over Timeout

Applicable only if a GPS receiver is used. Indicates whether the BTS should stop data transmission if the GPS lost synchronization with its satellites and the holdover passed timeout has occurred (Enable/Disable). When enabled, the BTS will stop transmitting after being in holdover state for more than Holdover Passed Timeout. The default is Enable.

4.9.1.8 Time Zone Offset From UTC

The offset of the local time from the UTC.

The range is -12:00 to +13:00 in 30 minutes resolution. The default is +00.00.

4.9.1.9 Local Time and Date

A read-only display of the local date and time (using 24-hour clock) as calculated using the UTC Time and Date and taking into account the Time Zone Offset From UTC and Daylight Saving Time parameters. The format is: hh:mm:ss; dd/mm/yyyy.

4.9.1.10 Daylight Saving Mode

The Daylight Saving Mode parameter is used to enable or disable the daylight saving feature using the following Start Date, Stop Date and Advance Hour Factor parameters. The default is Disable.

4.9.1.11 Advance Hour Factor

When Daylight Saving is enabled, this parameter defines the amount of time by which the clock should be advanced during the daylight saving period.

The available values are 0 (daylight saving disabled), 1 and 2 (hours). The default is 0.

4.9.1.12 Start Date

When Daylight Saving is enabled, this parameter defines the date for starting the daylight saving feature. At the beginning of this date (midnight at the beginning of this date), the clock will be advanced by the amount of hours specified by the Advance Hour Factor.

Use the format dd.mm to define the date and month at which to start activating the Daylight Saving feature.

4.9.1.13 Stop Date

When Daylight Saving is enabled, this parameter defines the date for ending the daylight saving feature (at “Advance Hour Factor” hours after midnight at the end of this date).

Use the format dd.mm to define the date and month at which to end activating the Daylight Saving feature.

4.9.2 Inventory & Statuses

The Inventory & Statuses menu enables viewing the following read-only properties and status parameters:

4.9.2.1 Navigation Processor SW Version

The software version of the navigation processor of the GPS receiver (if used).

4.9.2.2 Signal Processor SW Version

The software version of the signal processor of the GPS receiver (if used).

4.9.2.3 Number of Satellites

The number of satellites currently acquired by the GPS.

4.9.2.4 1PPS Failure

The status of External 1PPS clock (OK or Failed).

4.9.2.5 4 Satellites and more

Not applicable if a GPS receiver is not connected. Indicating whether 4 (the minimum required for initial synchronization) or more satellites are received by the GPS receiver (OK or Failed).

4.9.2.6 2 Satellites and more

Not applicable if a GPS receiver is not connected. Indicating whether 2 (the minimum number required for maintaining synchronization) or more satellites are received by the GPS receiver (OK or Failed).

4.9.2.7 GPS Communication Failure

Not applicable if a GPS receiver is not connected. Indicating the status of communication with the GPS receiver (OK or Failed).

4.9.2.8 Hold Over Entered

Indicating whether the device has entered into Hold Over state (None or Started).

4.9.2.9 Hold Over timeout passed

Indicating whether Hold Over Timeout has passed (None or Passed).

4.9.2.10 BS Stopped to Transmit

Indicating whether the BS is transmitting or not (OK/Stopped)

Appendix A

Sector Connections Schemes

In this Appendix:

- “Introduction” on page 746
- “Fourth Order Diversity, Beam Forming and MIMO” on page 747
- “Fourth Order Diversity, MIMO” on page 748
- “Second Order Diversity” on page 750

A.1 Introduction

The 4Motion 4-Channels Access Units implement four transmit/receive channels and are capable of supporting Beam Forming and/or MIMO Matrix A/B technologies. The operation mode is selected via software, giving the maximal flexibility to select the appropriate mode for each scenario and for each user.

The 2-Channels Access Units can support only MIMO Matrix A/B technology.

The following sections explain the configurations that support the different available diversity scenarios.

A.2 Fourth Order Diversity, Beam Forming and MIMO

This section describes the configurations that enable support of both Beam Forming and MIMO technologies.

Only ODUs that support Beam Forming should be used.

The example is for two 4x2 ODUs, where only the Tx/Rx ports are used. 2x2 ODUs can be used instead, as well as a combinations of one 4x2 ODU and one 2x2 ODU in the same sector (provided that the two ODUs use the same frequency band).

In the current release a Double Dual Slant (DDP) antenna should be used to support Beam Forming.

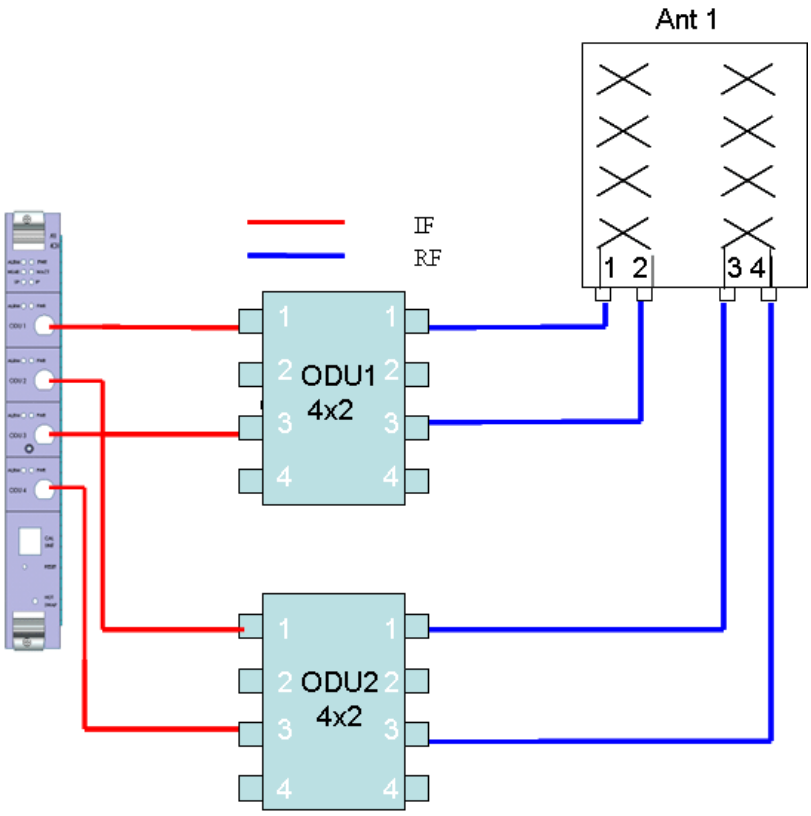

Figure A-1: Beam Forming and MIMO Support with 1 Dual Dual Slant (4-elements) Antenna

A.3 Fourth Order Diversity, MIMO

This section describes the configurations that enable support of MIMO technologies with fourth order diversity.

A.3.1 Wide Double Dual slant Array

Two separated Dual Slant antennas provide also space diversity.

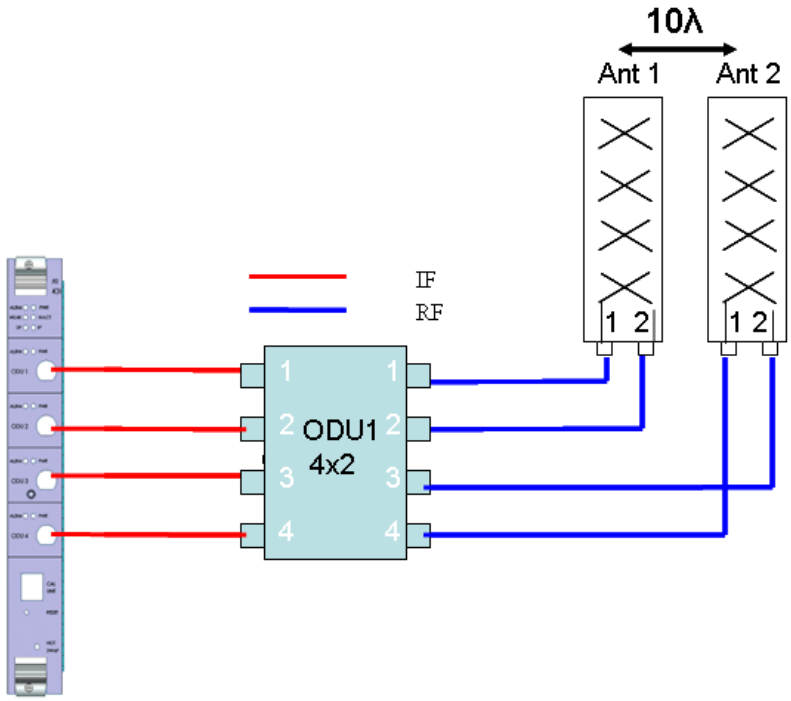

Figure A-2: Two Widely Spaced Dual Slant (2-elements) Antenna

A.3.2 Narrow Dual Dual Slant Array

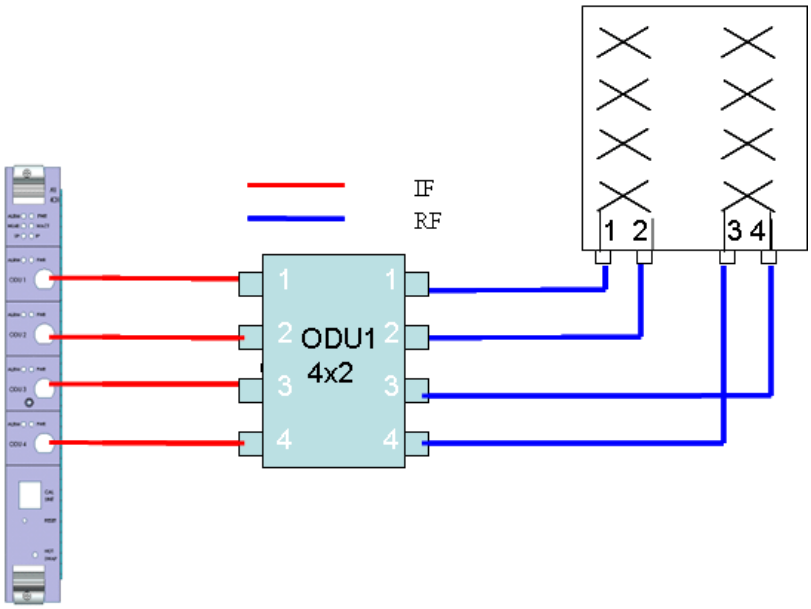

Figure A-3: One Dual Dual Slant (4-elements) Antenna

A.4 Second Order Diversity

All following configuration are shown with one 2x2 ODU. Two 1x1 ODUs can be used instead of the 2x2 ODU, provided both ODUs support the same frequency band.

A.4.1 Wide Double Single Slant Array (Space and Polarization Diversity)

This configuration consists of two dual-slant antennas separated by at least 10 wavelengths, where only one antenna element of each is connected, with different polarization.

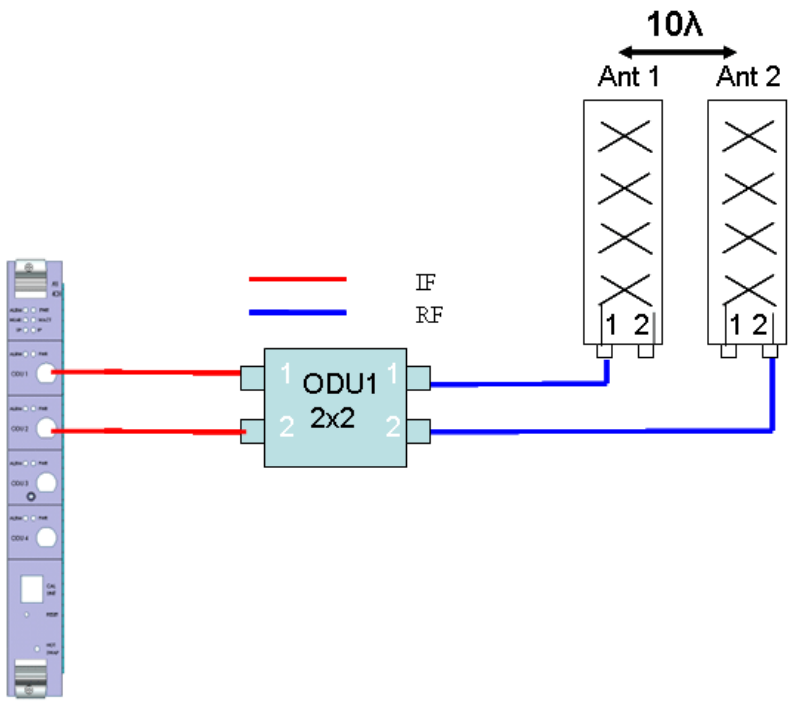

Figure A-4: Wide Double Single Slant Array with Two Partially Used Dual Slant (2-elements) Antennas

A.4.2 Narrow Dual Slant Array (Polarization Diversity)

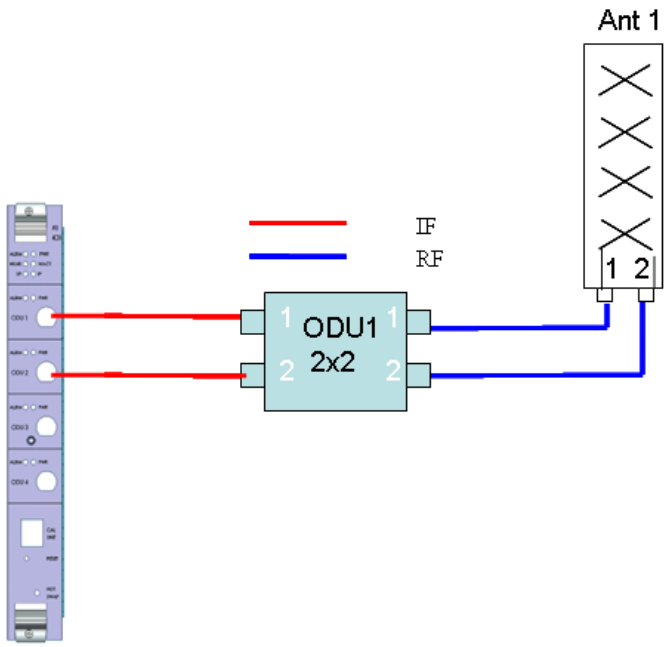

Figure A-5: Narrow Dual Slant Array with One Dual Slant (2-elements) Antenna

A.4.3 Wide Array, Vertical Polarization Antennas (Space Diversity)

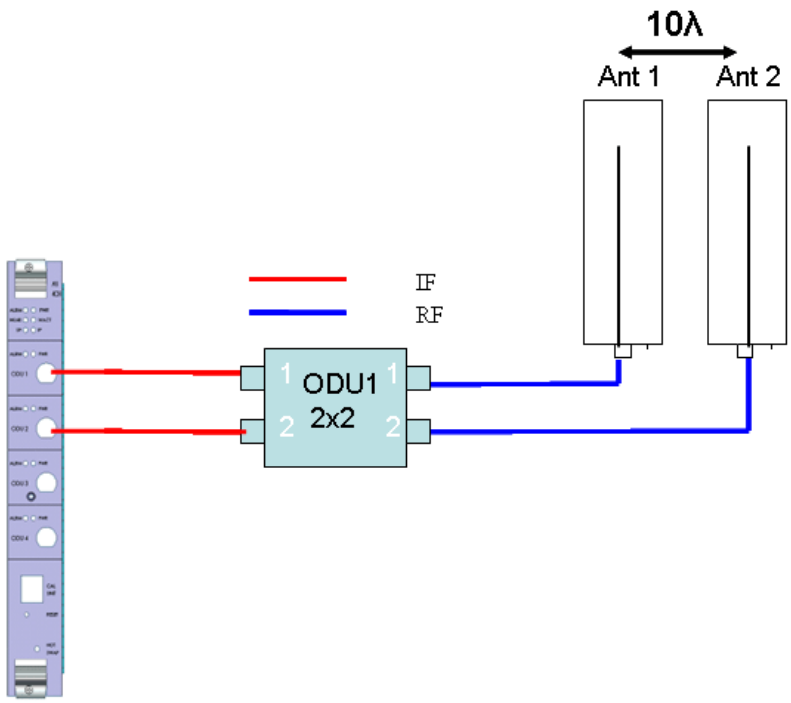

Figure A-6: Narrow Array with Two Vertical Polarization Antennas

Glossary

10Base-T	An Ethernet cabling standard where data is transmitted in baseband spectrum of a twisted pair cable (i.e. Cat 3 or better, Cat 5 in most networks) with data rate of 10 Mbps. (10 for 10Mbps, Base for baseband, T for twisted pair). 10Base-T implementation uses star topology.
100Base-T	An Ethernet cabling standard where data is transmitted in baseband spectrum of a twisted pair cable (i.e. Cat 5 or better), with data rate of 100 Mbps. 100Base-T implementation uses star topology. 100Base-T is also known as Fast Ethernet.
1000Base-T	An Ethernet cabling standard where data is transmitted in baseband spectrum of a twisted pair cable (Cat 5E or better), with data rate of 1000 Mbps. 1000Base-T implementation uses star topology. 1000Base-T is also known as Gigabit Ethernet.
3G	Third generation wireless service, designed to provide high data speeds, always-on data access, and greater voice capacity.
AAA	Authentication, Authorization, and Accounting (pronounced "triple a."). A system (or several systems) that controls what resources users have access to, and keeps track of the activity of users over the network.
AAS	Adaptive Antenna System, also called Advanced Antenna System, is a technology to enable the network operators to increase the wireless network capacity. In addition, adaptive antenna systems offer the potential of increased spectrum efficiency, extended range of coverage and higher rate of frequency reuse. Adaptive antenna systems consist of multiple antenna elements at the transmitting and/or receiving side of the communication link, whose signals are processed adaptively in order to exploit the spatial dimension of the mobile radio channel. Depending on whether the processing is performed at the transmitter, receiver, or both ends of the communication link, the adaptive antenna technique is defined as multiple-input single-output (MISO), single-input multiple-output (SIMO), or multiple-input multiple-output (MIMO).
ACL	Access Control List. A filtering mechanism used by many access IP routers that controls which traffic may be received or transmitted on an interface or port.
AISG	Antenna Interface Standards Group. The objective of the group is to facilitate the introduction of base station antennas with remotely adjustable tilt by agreeing open standards for the associated data transmission system.
ANSI	American National Standards Institute. A voluntary organization composed of corporate, government, and other members that coordinates standards-related activities, approves U.S. national standards, and develops positions for the United States in international standards organizations.
ARP	Address Resolution Protocol. Internet protocol used to map an IP address to a MAC address. Defined in RFC 826.
ARQ	Automatic Repeat reQuest. A communication technique in which the receiving device detects errors and requests retransmissions.
ASCII	American Standard Code for Information Interchange. A code for representing English characters as numbers, with each letter assigned a number from 0 to 127.

ASN	Access Service Network. An ASN is defined as a complete set of network functions needed to provide radio access to a WiMAX subscriber. An ASN is comprised of network elements such as one or more Base Stations (BS) and one or more ASN gateways (ASN-GW). An ASN may be shared by more than one Connectivity Service Network (CSN).
ASN-GW	Access Service Network Gateway. The ASN-GW is a network entity that acts as a gateway between the ASN and CSN. The ASN functions hosted in an ASN-GW may be viewed as consisting of two groups - the decision point (DP) that provides control functionality and enforcement point (EP) that provides bearer transport.
ASP	Application Service Provider. A third-party entity that manages and distributes software-based services and solutions to customers across a wide area network from a central data center.
AU	Access Unit
AVU	Air Ventilation Unit
AWG	An electronics industry acronym for American Wire Gauge. AWG is a measure of the thickness of copper, aluminum and other wiring.
AWGN	Additive White Gaussian Noise. Also known as WGN. Constant spectral energy at all frequencies with a probability histogram that follows a Gaussian bell shaped curve.
BE	Best Effort. Service supporting applications with no strict rate or delay requirements.
BS	Base Station. The WiMAX BS is an entity that implements the WiMAX MAC and PHY in compliance with the IEEE 802.16e standard. A BS operates on one frequency assignment, and incorporates scheduler functions for uplink and downlink resources.
BTS	Base Transceiver Station. A wireless network element that provides the radio interface of the network. The BTS comprises the radio transmission and reception devices, and also manages the signal processing related to the air interface.
BW	Bandwidth
BWA	Broadband Wireless Access
CALEA	The Communications Assistance for Law Enforcement Act is a United States wiretapping law passed in 1994. In its own words, the purpose of CALEA is: To amend title 18, United States Code, to make clear a telecommunications carrier's duty to cooperate in the interception of communications for Law Enforcement purposes, and for other purposes. CALEA was intended to preserve the ability of law enforcement agencies to conduct electronic surveillance by requiring that telecommunications carriers and manufacturers of telecommunications equipment modify and design their equipment, facilities, and services to ensure that they have the necessary surveillance capabilities.

CDMA	Code Division Multiple Access is a second generation (2G) cellular technology defined by Qualcomm in IS-95 and IS-2000. A coding scheme, used as a modulation technique, in which multiple channels are independently coded for transmission over a single wideband channel. In some communication systems, CDMA is used as an access method that permits carriers from different stations to use the same transmission equipment by using a wider bandwidth than the individual carriers. On reception, each carrier can be distinguished from the others by means of a specific modulation code, thereby allowing for the reception of signals that were originally overlapping in frequency and time. Thus, several transmissions can occur simultaneously within the same bandwidth, with the mutual interference reduced by the degree of orthogonality of the unique codes used in each transmission.
CE	The CE-marking is a European Union regulatory community sign. It symbolizes the compliance of the product with all essential requirements relating to safety, public health, consumer protection.
CINR	Carrier-to-Interference plus Noise Ratio (expressed in dB)
CIR	Committed Information Rate. The rate (in bits per second) at which a network guarantees to transfer information under normal conditions, averaged over a minimum increment of time.
CLI	Command Line Interface. A user interface that accepts typed commands to instruct the managed device on the task to perform.
cPCI	Compact Peripheral Component Interface. a standard for computer backplane architecture and peripheral integration, defined and developed by the peripheral component interconnect (PCI) industrial computers manufacturers group (PICMG). Designed to provide rugged, high-density systems.
CPU	Central Processing Unit.
CQI	Channel Quality Information
CS	Convergence Sublayer. Particular protocols that are responsible for gathering and formatting higher layer information so it can be processed by the lower layers.
CSMA/CD	Carrier Sense Multiple Access with Collision Detection. Media-access mechanisms wherein devices ready to transmit data first check the channel for a carrier. If no carrier is sensed for a specific period of time, a device can transmit. If two devices transmit at once, a collision occurs and is detected by all colliding devices. This collision subsequently delays retransmissions from those devices for some random length of time. Ethernet and IEEE 802.3 use CSMA/CD access.
CSN	Connectivity Service Network. A CSN is defined as a set of network functions that provide IP connectivity services to WiMAX subscribers and all the IP core network functions. A CSN is comprised of network elements such as routers, proxy/servers, user databases, and inter-working gateway devices.
CTC	Convolutional Turbo Code is a type of turbo codes with some of the convolutional schemes used. For its high-performance error correction nature, CTC is the iterative decoding scheme of choice as evidenced by their wide adoption in standards bodies.
DCD	Downlink Channel Descriptor.

DHCP	Dynamic Host Configuration Protocol. A protocol for dynamically assigning IP addresses from a pre-defined list to nodes on a network. Using DHCP to manage IP addresses simplifies client configuration and efficiently utilizes IP addresses.
DL	Down Link
DSCP	Differentiated Service Code Point, AKA DiffServ: An alternate use for the ToS byte in IP packets. Six bits of this byte are being reallocated for use as the DSCP field where each DSCP specifies a particular per-hop behavior that is applied to the packet.
DNS	Domain Naming System. A system that stores information about hostnames and domain names. DNS provides an IP address for each hostname, and lists the e-mail exchange servers accepting e-mail addresses for each domain.
DoS	Denial of Service
DSL	Digital Subscriber Line. A technology that exploits unused frequencies on copper telephone lines to transmit traffic typically at multi-megabit speeds. DSL can allow voice and high-speed data to be sent simultaneously over the same line. Because the service is 'always available,' end-users don't need to dial in or wait for call set-up.
EAP	Extensible Authentication Protocol, A protocol used between a user station and an authenticator or authentication server. It acts as a transport for authentication methods or types. It, in turn may be encapsulated in other protocols, such as 802.1x and RADIUS. EAP is defined by RFC 2284.
EDT	Electrical Down-Tilt
EIRP	Equivalent Isotropic Radiated Power. The apparent power transmitted towards the receiver, if it is assumed that the signal is radiated equally in all directions. The EIRP is equal to the power (in dBm) at the antenna port, plus the power gained from the directivity of the antenna (in dBi).
EMC	Electro-Magnetic Compatibility. The capability of equipment or systems to be used in their intended environment within designed efficiency levels without causing or receiving degradation due to unintentional EMI (Electro Magnetic Interference). EMC generally encompasses all of the electromagnetic disciplines.
EMS	Element Management System. An element management system (EMS) manages one or more of a specific type of telecommunications network element (NE). Typically, the EMS manages the functions and capabilities within each NE but does not manage the traffic between different NEs in the network.
EN	Abbreviation for "European Norm".
ERT-VR	Extended Real-Time Variable Rate. Service supporting real-time applications with variable bit rates that require guaranteed data rate, delay and low jitter, such as voice.
ETS	European Telecommunications Standard

ETSI	European Telecommunications Standards Institute. A non-profit organization producing voluntary telecommunications standards used throughout Europe, some of which have been adopted by the EC as the technical base for Directives or Regulations.
FA	Foreign Agent. A mobility agent on the foreign network that can assist the mobile node in receiving datagrams delivered to the care-of address. (The foreign network is the network to which the mobile node is attached when it is not attached to its home network, and on which the care-of-address is reachable from the rest of the Internet). See also HA (Home Agent).
FCC	Federal Communications Commission. A U.S. government agency that supervises, licenses, and controls electronic and electromagnetic transmission standards.
FEC	Forward Error Correction. A method of communicating data that can corrects errors in transmission on the receiving end. Prior to transmission, the data is put through a predetermined algorithm that adds extra bits specifically for error correction to any character or code block. If the transmission is received in error, the correction bits are used to check and repair the data.
FFT	Fast Fourier Transform. An algorithm for converting data from the time domain to the frequency domain; often used in signal processing.
FTP	File Transfer Protocol. A protocol for exchanging files over the Internet. FTP uses the Internet's TCP/IP protocols to enable data transfer.
GMT	Greenwich Mean Time. On January 1, 1972, GMT was replaced as the international time reference by Coordinated Universal Time (UTC), maintained by an ensemble of atomic clocks around the world.
GPS	Global Positioning System. A system that uses satellites, receivers and software to allow users to determine their precise geographic position.
GRE	General Routing Encapsulation. A method or technique of adding an IP standard header and trailer to a message that does not follow IP protocols. The encapsulated message is sent over a public network while received messages are stripped of the wrapper and processed. This permits non-standard data and totally encrypted messages to use the Internet. The technology is an important element in Virtual Private Network (VPN) offerings.
HA	Home Agent. A node on the home network (the network at which the mobile node seems reachable, to the rest of the Internet, by virtue of its assigned IP address) that effectively causes the mobile node to be reachable at its home address even when the mobile node is not attached to its home network.
HARQ	Hybrid Automatic Repeat reQuest (Hybrid ARQ) is a scheme wherein information blocks are encoded for partial error correction at receiver and additional, uncorrected errors are retransmitted.
HO	Hand-Over.
HP	Abbreviation for "Horizontal Pitch" or standard width measurement which defines the width for plug-in modules in the 19” construction system. One HP equals 5.08 mm.

IANA	Internet Assigned Numbers Authority. A regulatory group that maintains all assigned and registered Internet numbers, such as IP and multicast addresses.
ICMP	Internet Control Message Protocol is a protocol designed to allow hosts to send error and control messages to other network devices. Basically ICMP provides communication between the Internet Protocol (IP) software on network devices. The short ICMP messages use IP packets and are usually processed by the IP software, rather than presented to the user at the application level.
IEC	The International Electro-Technical Commission. an international organization that writes standards for safety for electrical and other equipment. Many IEC standards were adopted from the German VDE, which was the main historical standards-writing body in Europe. One goal of the IEC is to harmonize differing standards between European countries to facilitate free trade. The U.S. Underwriters Laboratories (UL) and the Canadian CSA are members of the IEC.
IEEE	Institute of Electrical and Electronics Engineers. IEEE (pronounced I-triple-E) is an organization composed of engineers, scientists, and students. The IEEE is best known for developing standards for the computer and electronics industry. In particular, the IEEE 802 standards for local-area networks are widely followed.
IEEE 802.16	Also known as WIMAX. A group of broadband wireless communications standards for metropolitan area networks (MANs) developed by a working group of the IEEE.
IEEE 802.16e	802.16e, also known as 802.16-2005, is an IEEE standard addressing mobility of wireless broadband (WiMax). IEEE 802.16e is sometimes called Mobile WiMAX, after the WiMAX forum for interoperability. 802.16e, based on an existing WiMAX standard 802.16a, adds WiMAX mobility in the 2-to-6 GHz-licensed bands. 802.16e allows for fixed wireless and mobile Non Line of Sight (NLOS) applications primarily by enhancing the OFDMA (Orthogonal Frequency Division Multiple Access).
IEEE 802.1p	A QoS method - A three-bit value that can be placed inside an 802.1Q frame tag.
IEEE 802.1q	The IEEE 802.1q standard defines the operation of VLAN Bridges that permit the definition, operation and administration of Virtual LAN topologies within a Bridged LAN infrastructure. The 802.1q specification establishes a standard method for inserting VLAN membership information into Ethernet frames. A tag field containing VLAN (and/or 802.1p priority) information can be inserted into an Ethernet frame, carrying VLAN membership information.
IEEE 802.3	A Local Area Network protocol suite commonly known as Ethernet. Ethernet uses Carrier Sense Multiple Access bus with Collision Detection CSMA/CD. This method allows users to share the network cable. However, only one station can use the cable at a time. A variety of physical medium dependent protocols are supported.
IF	Intermediate Frequency. Radio communications systems modulate a carrier frequency with a baseband signal in order to achieve radio transmission. In many cases, the carrier is not modulated directly. Instead, a lower IF signal is modulated and processed. At a later circuit stage, the IF signal is converted up to the transmission frequency band.

IGMP	Internet Group Membership Protocol) is protocol used by IP hosts to report their host group memberships to any immediately neighboring multicast routers. The use of IP multicasting in TCP/IP networks is defined as a TCP/IP standard in RFC 1112. In addition to defining address and host extensions for how IP hosts support multicasting, this RFC also defines the IGMP version 1. Version 2 of IGMP is defined in RFC 2236. Both versions of IGMP provide a protocol to exchange and update information about host membership in specific multicast groups.
IP	Internet Protocol. The standard that defines how data is transmitted over the Internet. IP bundles data, including e-mail, faxes, voice calls and messages, and other types, into "packets", in order to transmit it over public and private networks.
IPv4	Internet Protocol version 4 is still the most commonly used Internet Protocol (IP) version, initially deployed in 1983. IPv4 addresses are 32-bit numbers often expressed as 4 octets in "dotted decimal" notation (for example, 192.0.32.67). IPv6 is the newer version of the Internet Protocol (deployment began in 1999) that offers many improvements over IPv4, such as 128-bit IP addresses, and will eventually completely replace IPv4.
ISP	Internet Service Provider. A company that provides access to the Internet.
KEK	Key Encryption Key. Key that encrypts or decrypts other key for transmission or storage.
LED	Light Emitting Diode.
MAC	Media Access Control. The lower of the two sub-layers of the data link layer defined by the IEEE. The MAC sub-layer handles access to shared media, such as whether token passing or contention will be used.
MAC Address	Standardized data link layer address that is required for every port or device that connects to a LAN. Other devices in the network use these addresses to locate specific ports in the network and to create and update routing tables and data structures. MAC addresses are 6bytes long and are controlled by the IEEE.
MDT	Mechanical Down-Tilt
MIB	Management Information Base. A database of objects that can be monitored by a network management system. SNMP uses standardized MIB formats that allow any SNMP tools to monitor any device defined by a MIB.
MIMO	Multiple Input, Multiple Output. A technique for faster wireless communication. MIMO allows for the use of multiple transmitter and receiver antennas to increase throughput and range.
MIP	Mobile IP. A protocol used to provide IP mobility to IPv4-based nodes, defined in RFC-2002.
MIR	Maximum Information Rate. Specifies the maximum rate of information that can be available to a user. The MIR is used by the traffic policing mechanism to prevent users from sending excess traffic to the network.

MTU	Maximum Transmission Unit. This is the greatest amount of data that can be transferred in one physical frame on the network. If a packet that has a smaller MTU than the packet's frame length is sent, fragmentation will occur. For TCP MTU can range from 68 to 1500 bytes. Larger MTUs provide for lower overhead (fewer headers).
MS	Mobile Station. The equipment used by the end user to access the WiMAX network.
NAI	Network Address Identifier. Used to create a new unique subscriber identifier, when a subscriber enters the network without a user name.
NAP	Network Access Provider. A NAP is a business entity that provides WiMAX radio access infrastructure to one or more Network Service Providers (NSPs). An NAP implements this infrastructure using one or more ASNs.
NAS	Network Access Server. A Network Access Server operates as a client of RADIUS. The client is responsible for passing user information to designated RADIUS server(s(, and then acting on the response.
NMS	Network Management System. A system responsible for managing at least part of a network. An NMS is generally a reasonably powerful and well-equipped computer, such as an engineering workstation. NMSs communicate with agents to help keep track of network statistics and resources.
NOC	Network Operations Center. The physical space from which a typically large telecommunications network is managed, monitored and supervised.
NPU	Network Processing Unit
NRT-VR	Non Real Time - Variable Rate. Service supporting non-real-time applications with variable bit rates that require guaranteed data rate and are delay-tolerant such as file transfers
NSP	Network Service Provider. An NSP is a business entity that provides IP connectivity and WiMAX services to WiMAX subscribers compliant with the established service level agreement. The NSP concept is an extension of the Internet service provider (ISP) concept, providing network services beyond Internet access. To provide these services, an NSP establishes contractual agreements with one or more NAPs. An NSP may also establish roaming agreements with other NSPs and contractual agreements with third-party application providers (e.g. ASP, ISP) for the delivery of WiMAX services to subscribers. From a WiMAX subscriber standpoint, an NSP may be classified as a home or visited NSP.
NWG	Network Working Group. The WiMAX Forum's Network Working Group (NWG) is responsible for developing the end-to-end network requirements, architecture, and protocols for WiMAX, using IEEE 802.16e-2005 as the air interface.
OA&M	Operation, Administration & Maintenance. Provides the facilities and the personnel required to manage a network.
OCXO	Oven-Controlled crystal oscillator often used in navigation system clocks, frequency standards, MTI radars, wireless base stations, telecom timing modules and precision test equipment.
ODU	Outdoor Unit

OFDM	Orthogonal Frequency Division Multiplexing: A method for multiplexing signals, which divides the available bandwidth into a series of frequencies known as tones. Orthogonal tones do not interfere with each other when the peak of one tone corresponds with the null. The rapid switching, frequency-hopping technique is intended to allow more robust data service.
OFDMA	Orthogonal Frequency Division Multiple Access. It's a logical extension of OFDM and a modulation/multiple access technique. OFDMA divides a signal into sub-channels (i.e. groups of carriers), with each sub-channel (or several sub-channels) being allocated to a different subscriber.
OOB	Out-Of-Band. Out-of-band management is a method wherein management information exchanged between the network element and its associated management application is carried on a separate communications path from the user data that is coming to/from the network element. Conversely, in-band (IB) management is management data that is carried across the same interface as user data.
OSPF	Open Shortest Path First. A link-state IGP (Interior gateway protocol) that makes routing decisions based on the shortest-path-first (SPF) algorithm (also referred to as the Dijkstra algorithm).
OSS	Operations Support Systems. A system that processes telecommunications information supporting various management functions, such as billing, customer care, network management, inventory control, maintenance, trouble ticket reporting, surveillance and service provisioning; not considered a network element or part of the network itself.
PDA	Personal Digital Assistant. A handheld computing device.
PDU	Protocol Data Unit. The concept of a PDU is used in the OSI reference model. From the perspective of a protocol layer, a PDU consists of information from the layer above plus the protocol information appended to the data by that layer.. For example, a frame is a PDU of the Data Link Layer, and a packet is a PDU of the Network Layer.
PEP	Policy Enforcement Point is an entity in a policy-based system where decisions are enacted.
PER	Packet Error Rate. In a digital transmission, PER is the percentage of packets with errors divided by the total number of packets that have been transmitted, received or processed over a given time period.
PHS	Payload Header Suppression. PHS is a technique used to mask redundant cell, frame, or packet header information when one or more of the same type of higher layer data PDUs are transported as the payload of an 802.16 MAC PDU.
PHY	PHYsical Layer. The physical, or lowest, layer of the OSI Network Model. In a wireless network, the PHY defines parameters such as data rates, modulation method, signaling parameters, transmitter/receiver synchronization, etc. Within an actual radio implementation, the PHY corresponds to the radio front end and baseband signal processing sections.

PICMG	The PCI Industrial Computers Manufacturer's Group is a consortium of over 450 industrial computer product vendors. PICMG's charter is to develop specifications for PCI-based systems and boards for use in industrial computing applications. PICMG 2.x series is a specification for PCI-based equipment that combines the power of low cost PCI silicon and software with the rugged Eurocard packaging.
PIM	Protocol Independent Multicast. A protocol-independent multicast routing protocol. PIM sparse mode routes to multicast groups that might span wide-area and interdomain internets. PIM dense mode is a flood-and-prune protocol.
PIU	Power Interface Unit
PKM	Privacy Key Management. The key management protocol used in 802.16 to obtain the needed authorization to use the media. PKM protocol operates in two phases: AK (Authorization Key) phase, and TEK (Traffic Encryption Keys). AK represents the secret key used to obtain TEK in the exchanges between MS and BS in subsequent phases.
PSU	Power Supply Unit
PUSC	Partial Usage of Sub-Channels
QAM	Quadrature Amplitude Modulation. A technique used in wireless applications to double the available bandwidth by combining two amplitude-modulated signals. The two combined signals differ in phase by 90 degrees; this technique doubles the bandwidth by combining the two signals at the source before transmission, transmitting digital data at a rate of 4 bits per signal change.
QoS	Quality of Service. Measure of performance for a transmission system that reflects its transmission quality and service availability.
QPSK	Quadrature Phase Shift Keying. A data transfer technique used in coaxial cable networks that sends data using modulating signals. Four different phases represent data, with each signal's information determined by the signal before it. For example, if a phase stays the same from one signal to the other, the information has not changed.
RADIUS	Remote Authentication Dial-In User Service, an authentication and accounting system used by many Internet Service Providers (ISPs). When you connect to the system you must enter your username and password. This information is passed to a RADIUS server, which checks that the information is correct, and then authorizes access to the system.
RET	Remote Electrical Tilt
RF	Radio frequency. An AC signal of high enough frequency to be used for wireless communications.
RFC	Request For Comments. The name of the result and the process for creating a standard on the Internet. New standards are proposed and published on the Internet, as a Request For Comments. The proposal is reviewed by the Internet Engineering Task Force.
RoHS	Restriction of the use of certain Hazardous Substances in electrical and electronic equipment, reference EC Directive 2002/95/EC of 27 January 2003.

RS-232	A serial interface published by the EIA (Electronic Industries Association) for asynchronous data communication over distances up to a few hundred feet. Characterized by a single-ended (not differential) physical layer, it uses one signal wire for transmission, another for reception, and a common wire (ground), plus some timing and control signals.
RS-422	RS-422 is a serial interface standard in which data is sent in a differential pair (two wires, or twisted pair cable), which allows greater distances and higher data rates than non-differential serial schemes such as RS-232.
RSSI	Received Signal Strength Indicator. A signal or circuit that indicates the strength of the incoming (received) signal in a receiver.
R&TTE	Radio & Telecommunications Terminal Equipment. The R&TTE Directive 1999/5/EC governs the marketing and use of R&TTE equipment. With the exception of a few categories of equipment, the Directive covers all equipment, which uses the radio frequency spectrum. It also covers all terminal equipment attached to public telecommunication networks.
RTC	Real Time Clock.
RTD	Round Trip Delay.
RTP	Real Time Protocol. An Internet protocol for transmitting real-time data such as audio and video. RTP itself does not guarantee real-time delivery of data, but it does provide mechanisms for the sending and receiving applications to support streaming data. Typically, RTP runs on top of the UDP protocol, although the specification is general enough to support other transport protocols.
RT-VR	Real Time - Variable Rate. Service supporting real-time applications with variable bit rates that require guaranteed data rate and delay such as streaming video.
Rx	Receive
SBS	Serving Base Station
SDU	Service Data Unit. A set of data that is sent by a user of services of a given layer, and is transmitted to a peer service user semantically unchanged. The SDU is the data that a certain layer will pass to the layer below.
SFA	Service Flow Authorization.
SFM	The Service Flow Manager (SFM) located in the BS is responsible for the creation, admission, activation, modification, and deletion of IEEE 802.16e-2005 service flows. It consists of an Admission Control (AC) function, data path function and the associated local resource information. AC decides whether a new service flow can be admitted to the system.

SNMP	Simple Network Management Protocol. A network management protocol that provides a means to monitor and control network devices, and to manage configurations, statistics collection, performance, and security. SNMP works by sending messages, called protocol data units (PDUs), to different parts of a network. SNMP-compliant devices, called agents, store data about themselves in Management Information Bases (MIBs) and return this data to the SNMP requesters.
SSH	Secure Shell is a protocol for secure remote login and other secure network services over an insecure network.
TBS	Target Base Station
TCP	Transmission Control Protocol. Connection-oriented transport layer protocol that provides reliable full-duplex data transmission. TCP is the part of the TCP/IP suite of protocols that is responsible for forming data connections between nodes that are reliable, as opposed to IP, which is connectionless and unreliable.
TCXO	Temperature-Compensated crystal oscillator often used for frequency control in tactical radios, telecom timing modules (Stratum 3 Type), wireless systems, and reference oscillators.
TDD	Time Division Duplex is a duplexing technique dividing a radio channel in time to allow downlink operation during part of the frame period and uplink operation in the remainder of the frame period.
TEK	Traffic Encryption Key - a symmetric key that is used to encrypt/decrypt messages.
TFTP	Trivial File Transfer Protocol. Simplified version of FTP that allows files to be transferred from one computer to another over a network, usually without the use of client authentication.
ToS	Type of service. The method of handling traffic using information extracted from the fields in the ToS byte to differentiate packet flows.
Tx	Transmit
TUV	TÜV is a safety-testing laboratory with headquarters in Germany. TÜV can test products for compliance with IEC or VDE requirements. Products that have the TÜV insignia have been tested by TÜV for compliance with applicable standards for sale in the European market.
U	Abbreviation for "Unit" or standard height measurement which defines the vertical height for plug-in modules in the 19” construction system. One U equals 44.5 mm.
UCD	Uplink Channel Descriptor.
UDP	User Datagram Protocol. Connectionless transport layer protocol in the TCP/IP protocol stack. UDP is a simple protocol that exchanges datagrams without acknowledgments or guaranteed delivery, requiring that error processing and retransmission be handled by other protocols. UDP is defined in RFC 768.
UGS	Unsolicited Grant Service. Service supporting real-time applications generating fixed-rate data such as voice over IP without silence suppression.

UL	1. Abbreviation for “Underwriters’ Laboratory”. The UL is an independent organization which conducts safety tests and product certifications. 2. Up Link
UTC	Coordinated Universal Time. The reference for the official time used by all countries in the world, maintained by an ensemble of atomic clocks around the world, and it is independent from the time zones. The modern implementation of Greenwich Mean Time.
VLAN	Virtual Local Area Network. A group of devices on one or more LANs that are configured with the same VLAN ID so that they can communicate as if they were attached to the same wire, when in fact they are located on a number of different LAN segments. Used also to create separation between different user groups.
VoIP	Voice over Internet Protocol. Provides an advanced digital communications network that bypasses the traditional public switched telephone system and uses the Internet to transmit voice communication. VoIP enables people to use the Internet as the transmission medium for telephone calls by sending voice data in packets using IP rather than by traditional circuit switched transmissions of the PSTN.
WCS	Wireless Communications Service is defined by the Federal Communications Commission as radio communications that may provide fixed, mobile, radio location, or satellite communication services to individuals and businesses within their assigned spectrum block and geographical area. The WCS is in the 2.3 GHz band from 2,305 to 2,320 MHz and 2,345 to 2,360 MHz.
WEEE	Waste Electronic and Electrical Equipment. The purpose of Directive 2002/96/EC on waste electrical and electronic equipment (WEEE) is, as a first priority, the prevention of waste electrical and electronic equipment (WEEE), and in addition, the reuse, recycling and other forms of recovery of such wastes so as to reduce the disposal of waste. It also seeks to improve the environmental performance of all operators involved in the life cycle of electrical and electronic equipment, e.g. producers, distributors and consumers and in particular those operators directly involved in the treatment of waste electrical and electronic equipment.
Wi-Fi	Wi-Fi (short for wireless fidelity and pronounced 'why-fye') is a term for certain types of wireless local area network that use specifications in the IEEE 802.11 family. The term Wi-Fi was created by an organization called the Wi-Fi Alliance, which oversees tests that certify product interoperability.
WiMAX	WiMAX is an acronym that stands for Worldwide Interoperability for Microwave Access. WiMAX is a standards-based technology enabling the delivery of last mile wireless broadband access as an alternative to cable and DSL. WiMAX provides fixed, nomadic, portable, and mobile wireless broadband connectivity without the need for direct line-of-sight to a base station.
XML	Extensible Markup Language. Language used for defining a set of markers, called tags, that define the function and hierarchical relationships of the parts of a document or data set. It is a flexible way to create common information formats and share both the format and the data, most commonly on the web. It generally similar to HTML and helps share information in a consistent way. XML is "extensible" because, unlike HTML, the markup symbols are unlimited and self-defining.