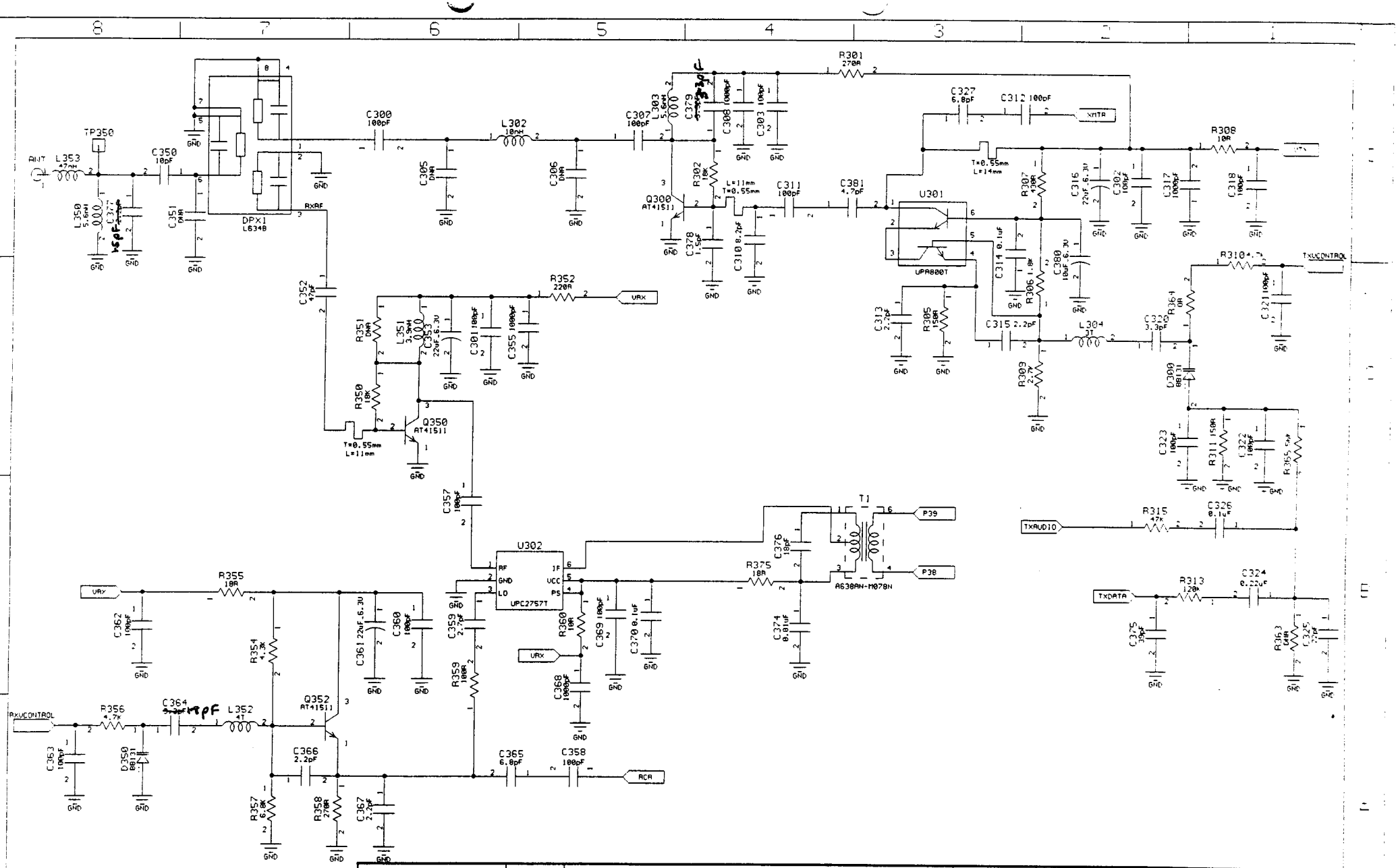

ASTRALINK Technology	TITLE	900Mhz Headset RF Board Schematic Diagram (HD) Picard	DESIGN BY	DRAWN BY	APPROVED BY	PRINTED DATE	SHEET
	FUNCTION	RF Front End	CHAN/THOMAS	S.C. GOH	CHAN/THOMAS	15 04 98	1 OF 4
	VERSION	3.3 DATE 15/04/98 PCB DATE - SCH P/N H-SCH000001 PCB P/N H-PCB000001					

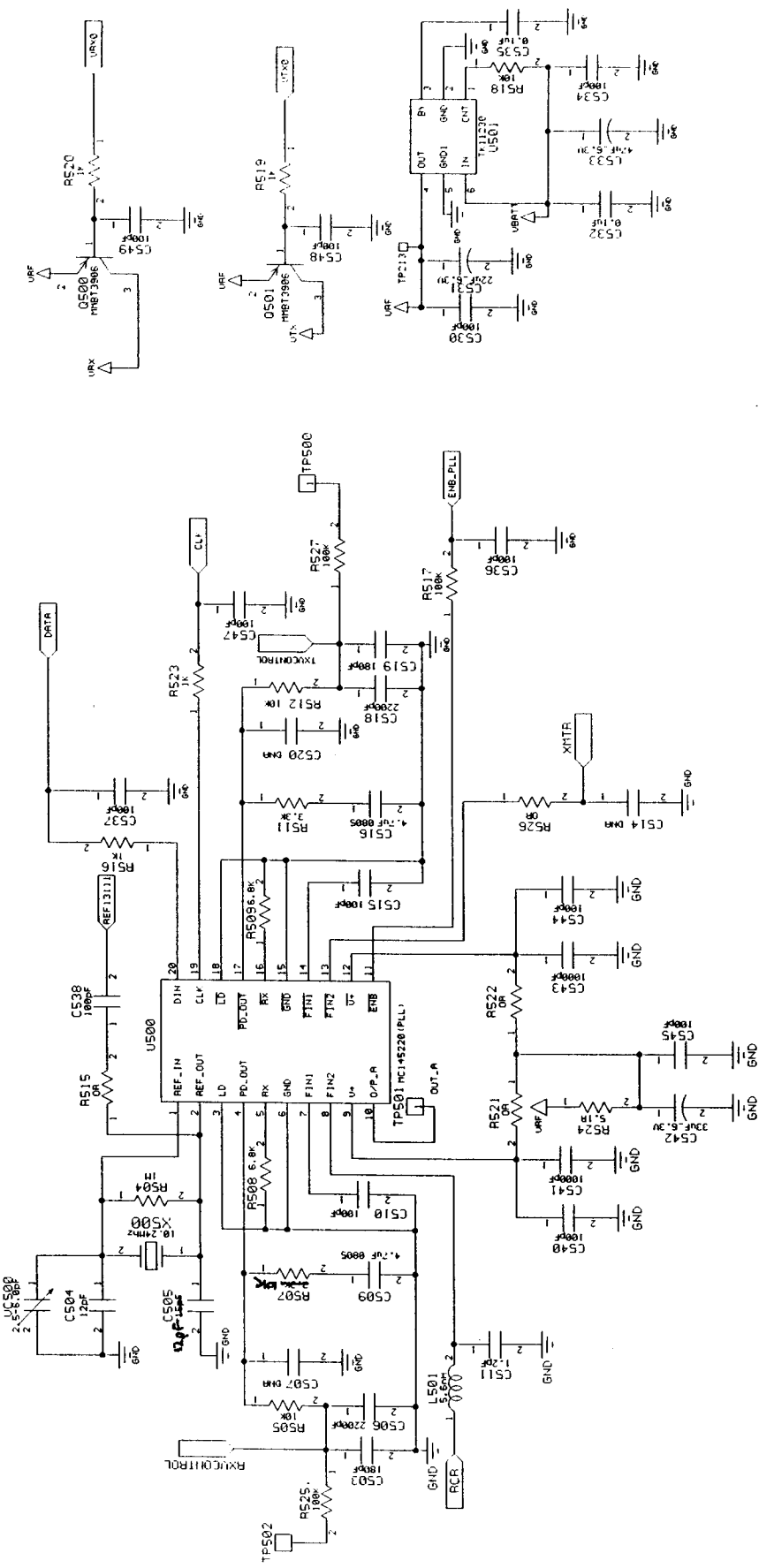

FCC ID: LKKXLT
Marstech Report No. 98257D
EXHIBIT C(2)-2

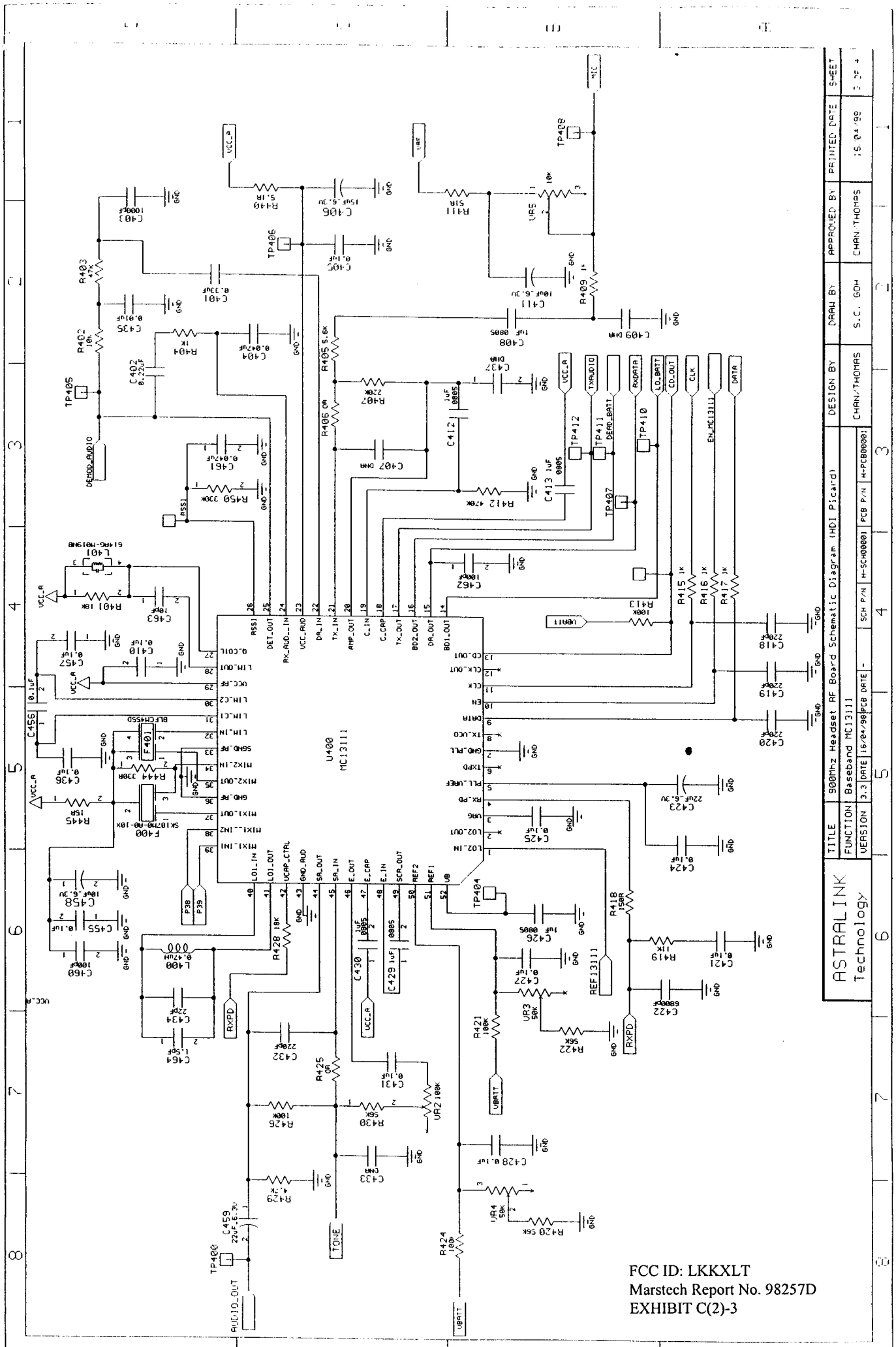

FCC ID: LKKXLT
Marstech Report No. 98257D
EXHIBIT C(2)-3

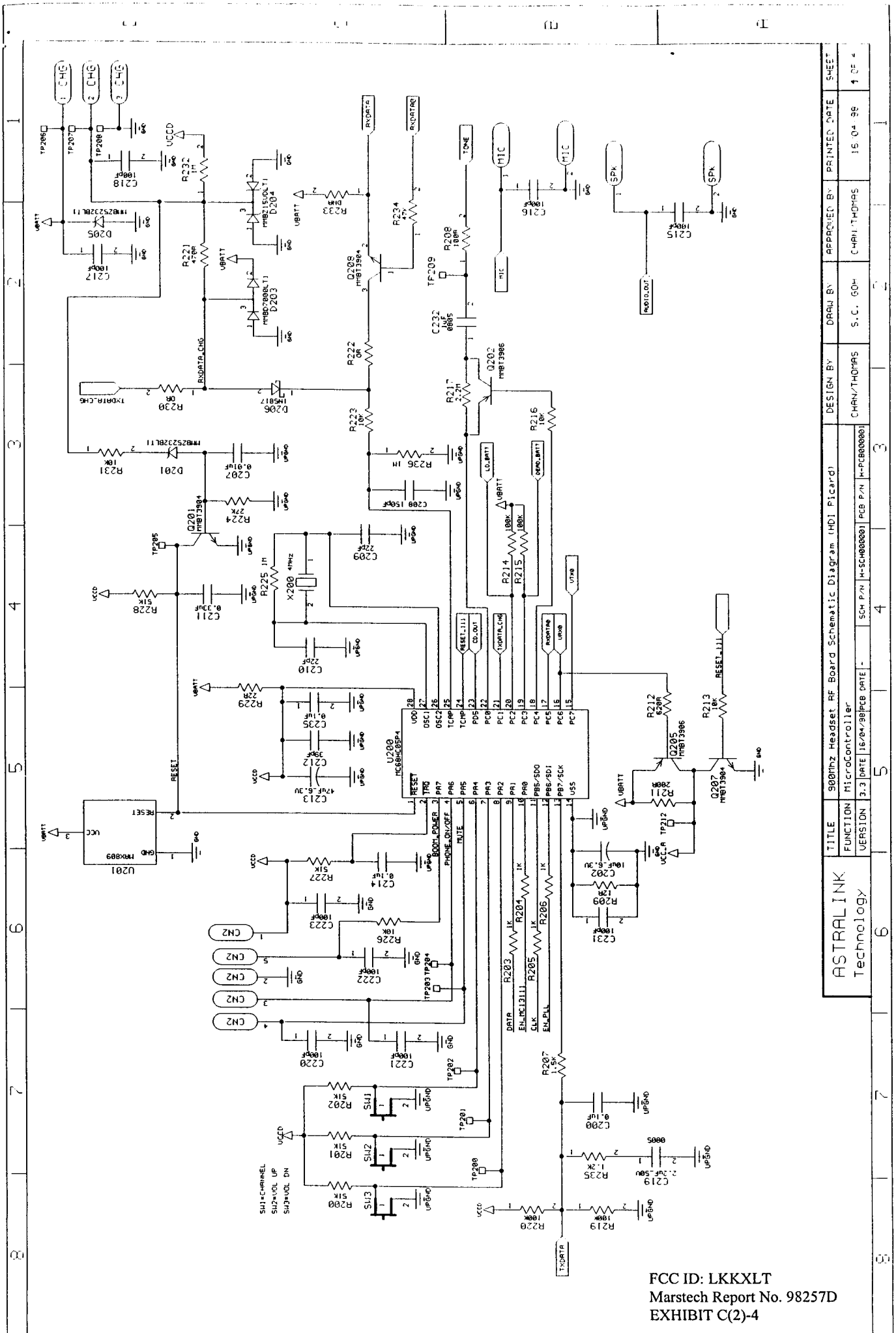
ASTRAL INK Technology
TITLE 900Mhz Headset RF Board Schematic Diagram (HDI Picard)
FUNCTION MicroController
VERSION 3.3
DATE 16/04/98
PCB DATE -
SCH P/N H-SCH000001
PCB P/N H-PCB000001
DESIGN BY CHAN/THOMAS
DRAW BY S.C. GOH
APPROVED BY CHAN/THOMAS
PRINTED DATE 16.04.98
SHEET 1 OF 4
U200 MC68HC05P4
U201 MAX809
Q201 MMBT3904
Q202 MMBT3906
Q203 MMBT3906
Q204 MMBT3904
Q205 MMBT3906
Q207 MMBT3904
X200 4MHz
D201 MMBZ5232BLT1
D203 MMBD7000LT1
D204 MMBZ15VDLT1
D205 MMBZ5232BLT1
D206 1N5817
SW1=CHANNEL
SW2=VOL UP
SW3=VOL DN
FCC ID: LKKXLT
Marstech Report No. 98257D
EXHIBIT C(2)-4

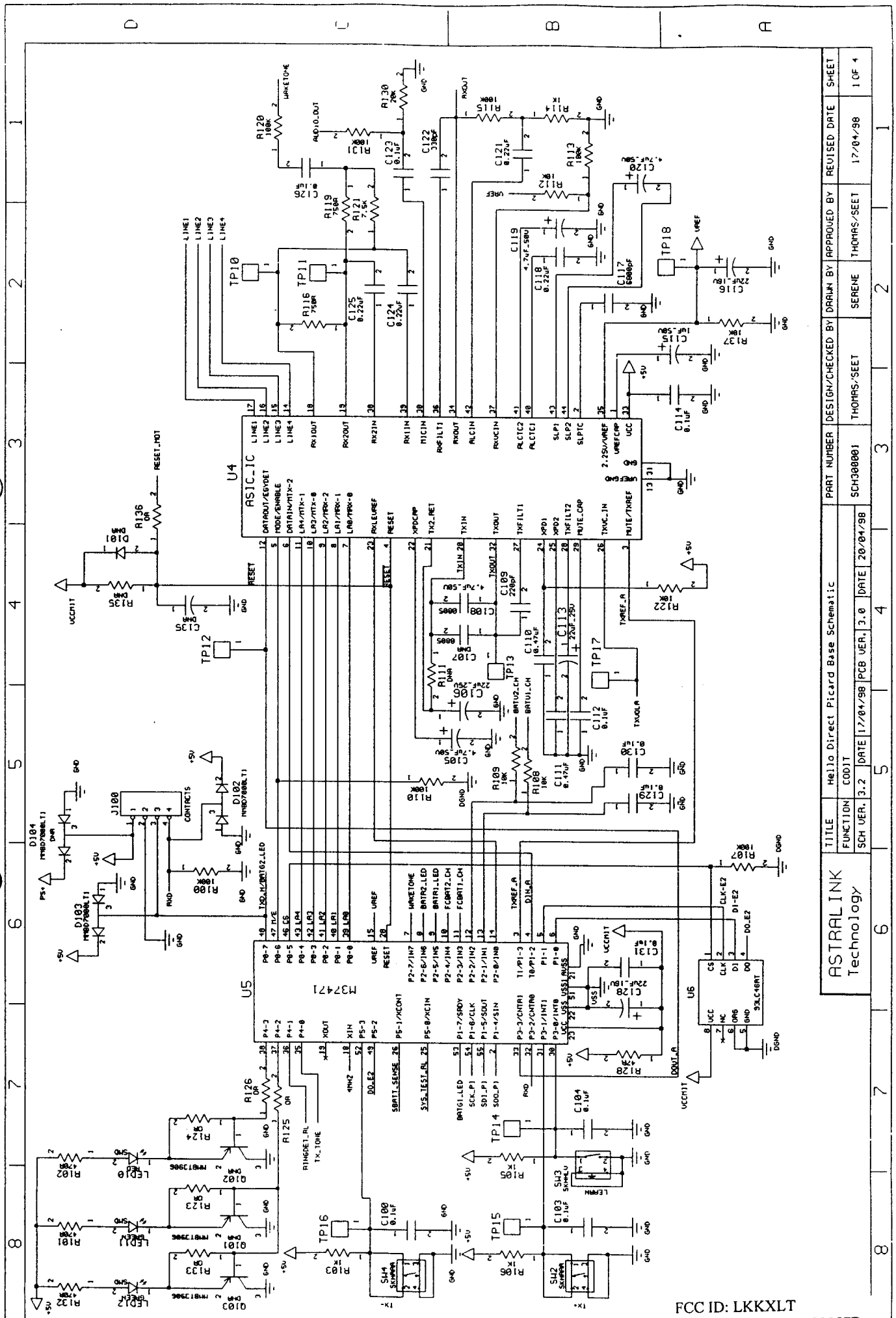

FCC ID: LKKXLT
Marstech Report No. 98257D

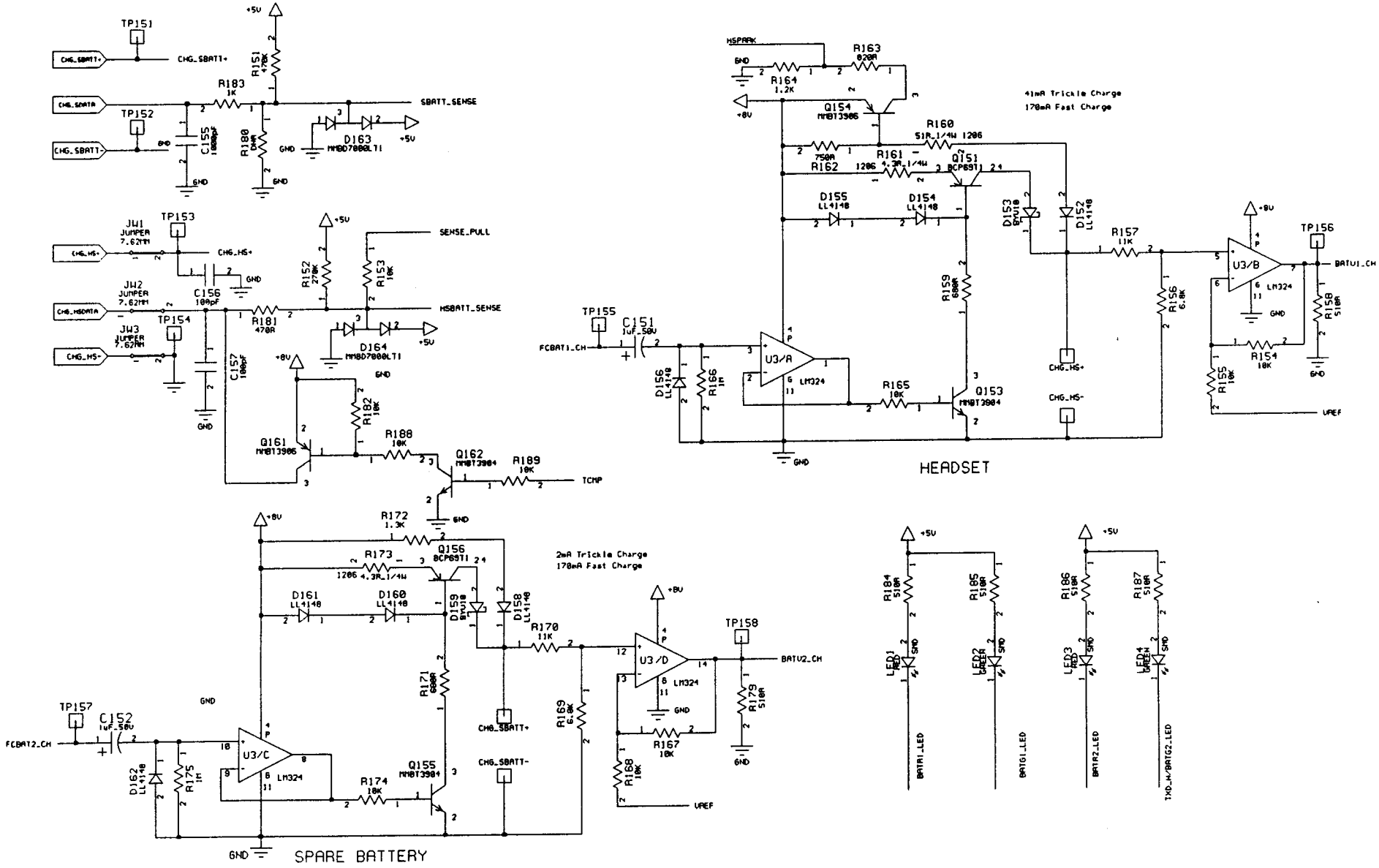

ASTRALINK Technology	TITLE	Hello Direct Picard Base Schematic						PART NUMBER	DESIGN/CHECKED BY	DRAWN BY	APPROVED BY	REVISED DATE	SHEET
	FUNCTION	BATTERY CHARGER						SCH300001	THOMAS/SEET	SERENE	THOMAS/SEET	17/04/98	2 OF 4
	SCH VER.	3.2	DATE	17/04/98	PCB VER.	3.0	DATE 20/04/98						

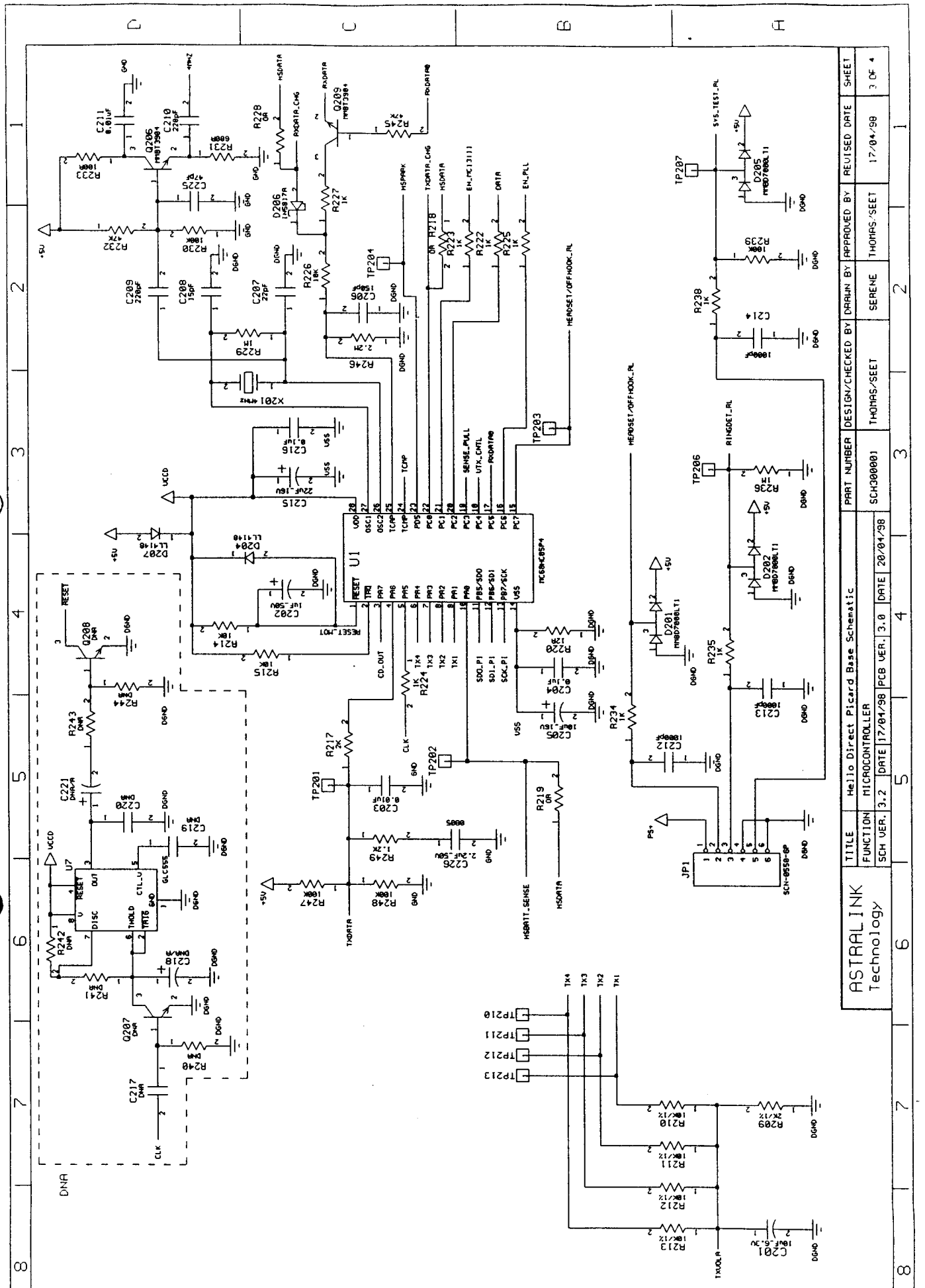

FCC ID: LKKXLT
Marstech Report No. 98257D
EXHIBIT C(2) 7

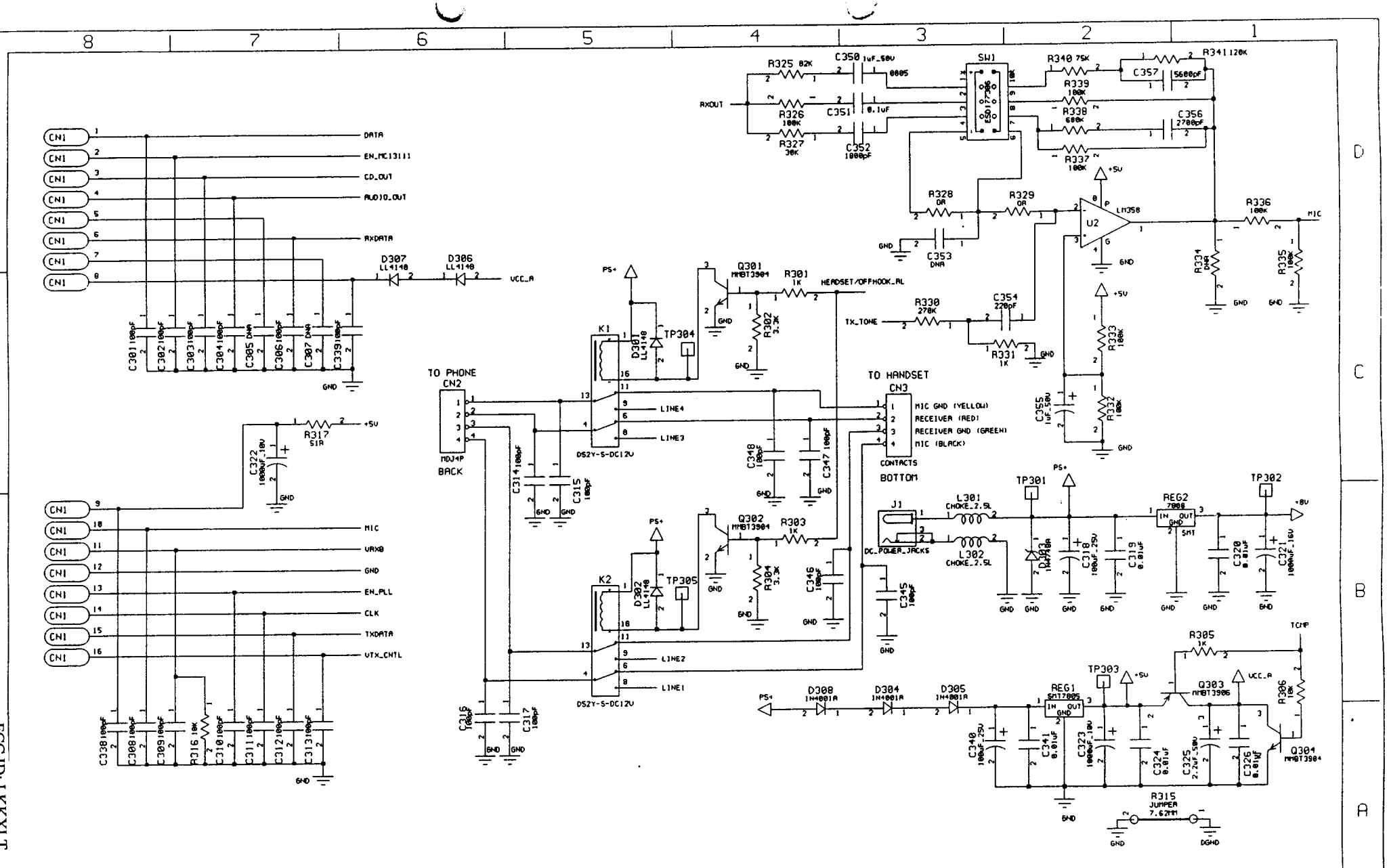

ASTRALINK Technology	TITLE	Hello Direct Picard Base Schematic					PART NUMBER	DESIGN/CHECKED BY	DRAWN BY	APPROVED BY	REVISED DATE	SHEET
	FUNCTION	Interface/ Power Supply					SCH300001	THOMAS/SEET	SERENE	THOMAS/SEET	17/04/98	4 OF 4
	SCH VER.	3.2	DATE	17/04/98	PCB VER.	3.0	DATE	20/04/98				

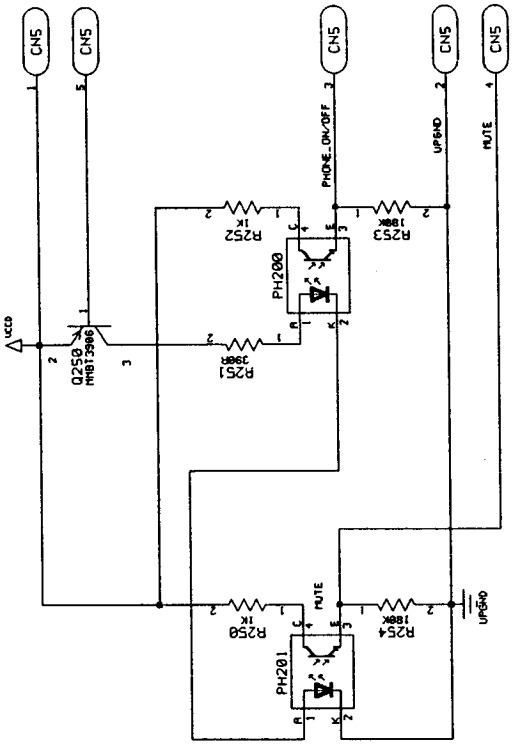

ASTRALINK Technology	TITLE	900MHz Base RF Schematic Diagram (HD) Picard	PART NUMBER	DESIGN/CHECKED BY	DRAWN BY	APPROVED BY	REVISED DATE	SHEET
	FUNCTION	-	H-SCH000003	THOMAS	SC GOH	THOMAS	13/02/98	1 OF 1
	SCH VER.	1.1	DATE 13/02/98	PCB VER. 1	DATE 12/02/98			

FCC ID: LKKXLT
Marstech Report No. 98257D
EXHIBIT C(2)-9

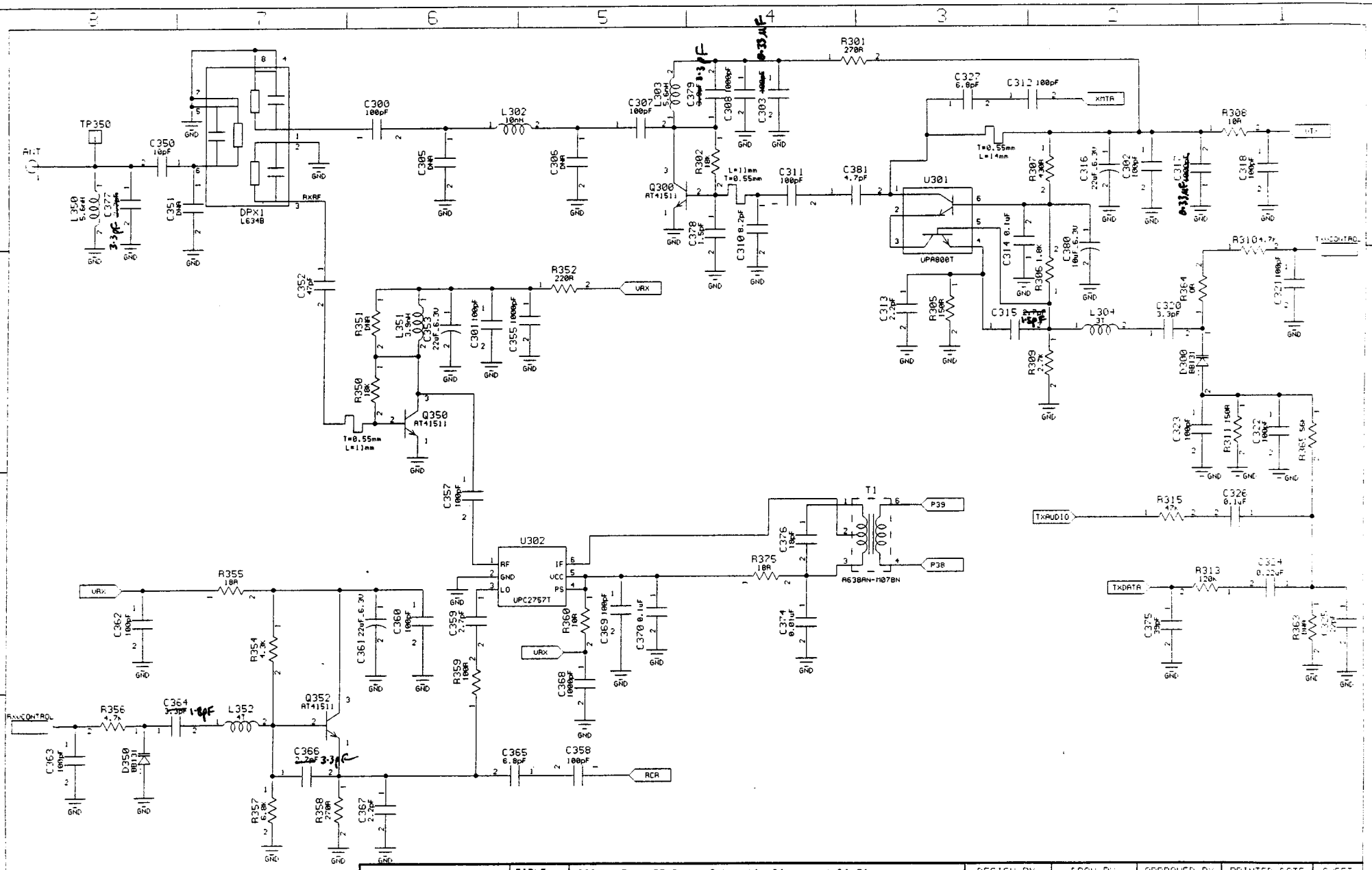

ASTRALINK Technology	TITLE	900Mhz Base RF Board Schematic Diagram (HD1 Picard)						DESIGN BY	DRAW BY	APPROVED BY	PRINTED DATE	SHEET
	FUNCTION	RF Front End						CHAN/THOMAS	S.C. GOH	CHAN/THOMAS	16/04/98	1 OF 3
	VERSION	2.2	DATE 16/04/98	PCB DATE -	SCH P/N H-SCH000001	PCB P/N H-PCB000001						

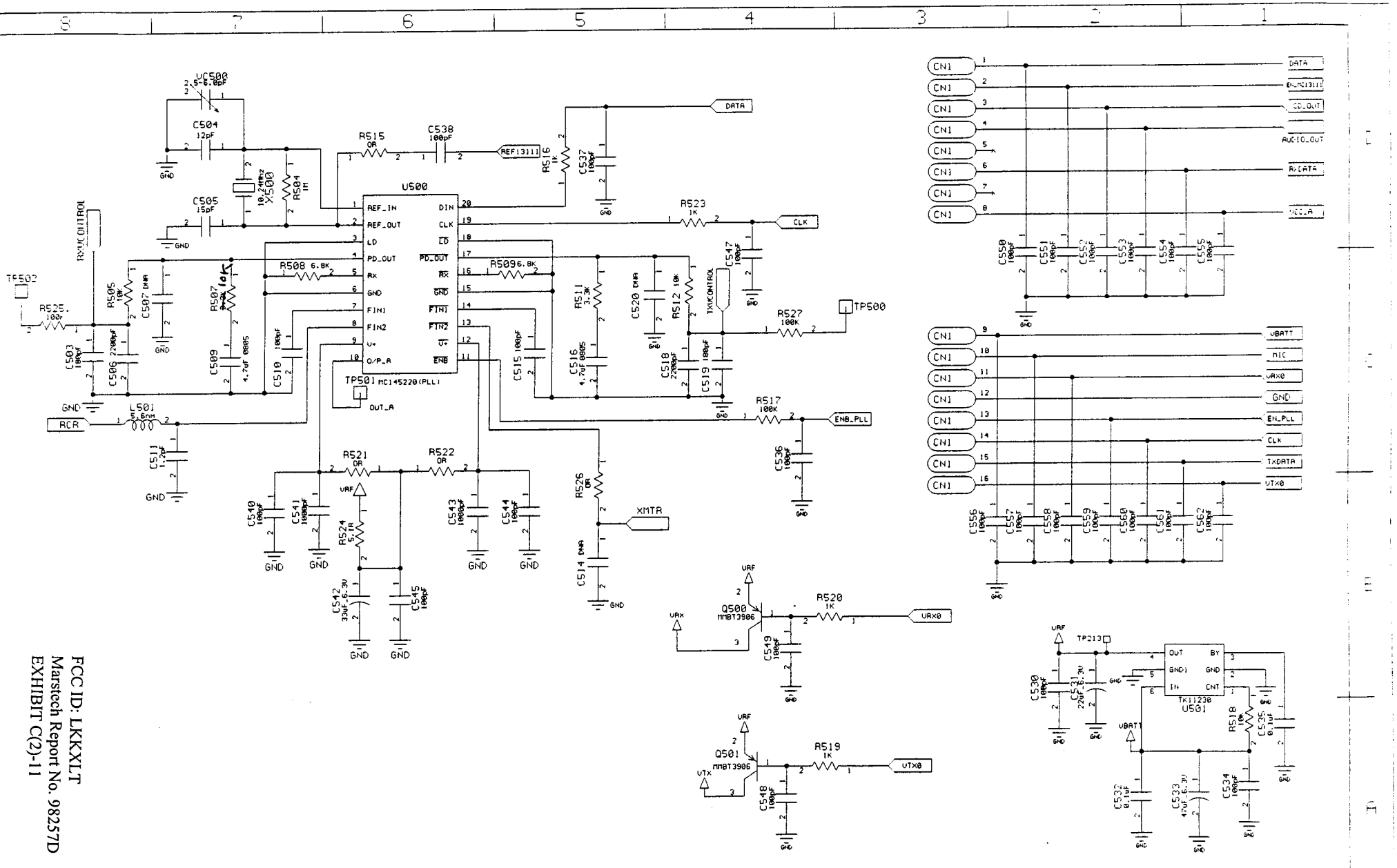

ASTRALINK Technology	TITLE	900Mhz Base RF Board Schematic Diagram (HDI-Picard)						DESIGN BY	DRAW BY	APPROVED BY	PRINTED DATE	SHEET
	FUNCTION	PLL and Wideband IF						CHAN/THOMAS	S.C. GOH	CHAN/THOMAS	16/04/98	3 OF 3
	VERSION	2.2	DATE 16/04/98	PCB DATE -	SCH P/N	H-SCH000001	PCB P/N H-PCB000001					

FCC ID: LKKXLT
Marstech Report No. 98257D
EXHIBIT C(2)-11

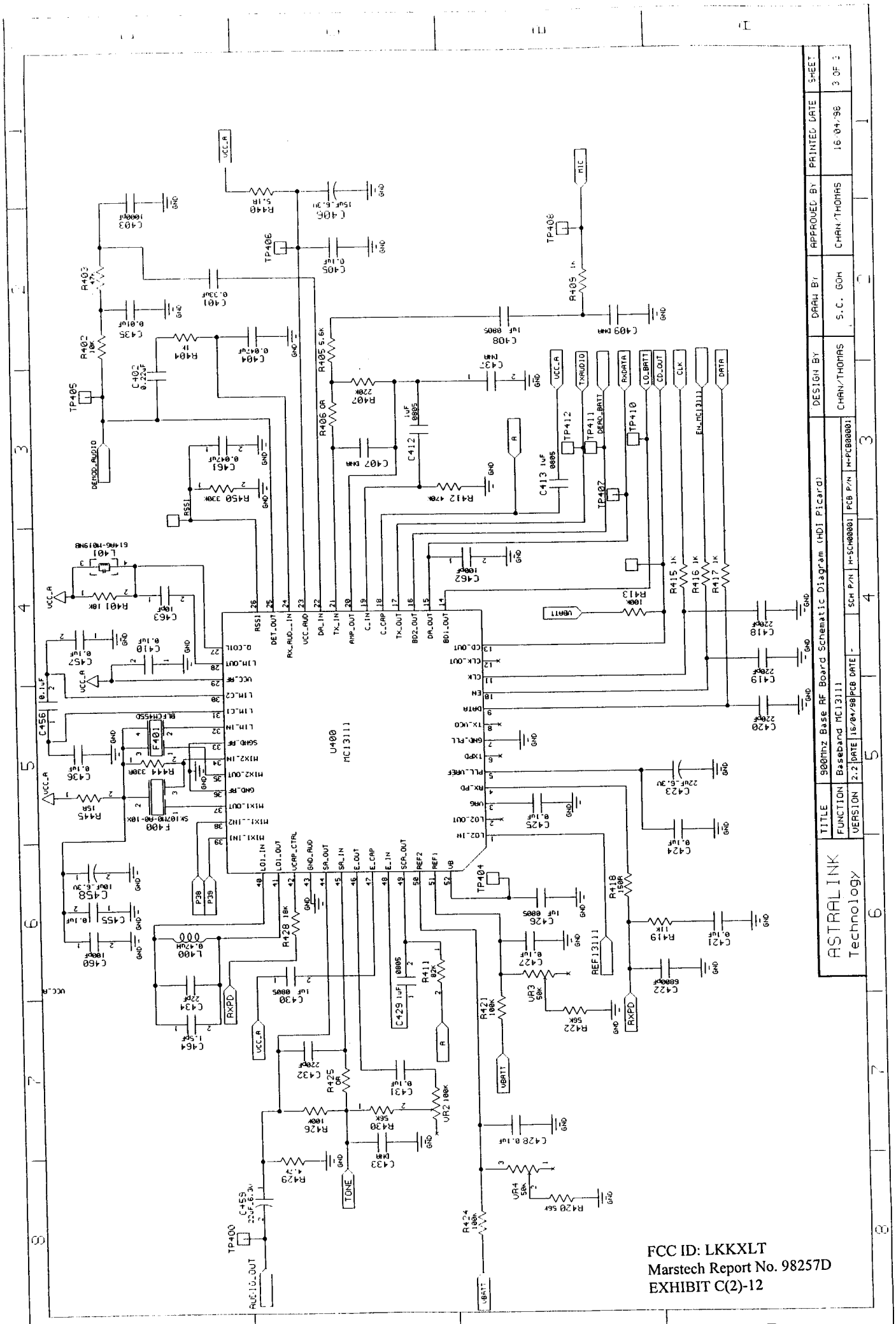
ASTRALINK Technology
TITLE 900Mhz Base RF Board Schematic Diagram (HDI Picard)
FUNCTION Baseband MC13111
VERSION 2.2
DATE 16/04/98
PCB DATE -
SCH P/N H-SCH00001
PCB P/N H-PCB00001
DESIGN BY CHAN/THOMAS
DRAW BY S.C. GOH
APPROVED BY CHAN/THOMAS
PRINTED DATE 16-04-98
SHEET 3 OF 3
U400 MC13111
F400 SX10210-A0-10X
F401 BLFCH455D
L401 61496-M019NB
DEMOD_AUDIO
MIC
TONE
AUDIO_OUT
VBATT
VCC_A
RXPD
REF13111
FCC ID: LKKXLT
Marstech Report No. 98257D
EXHIBIT C(2)-12