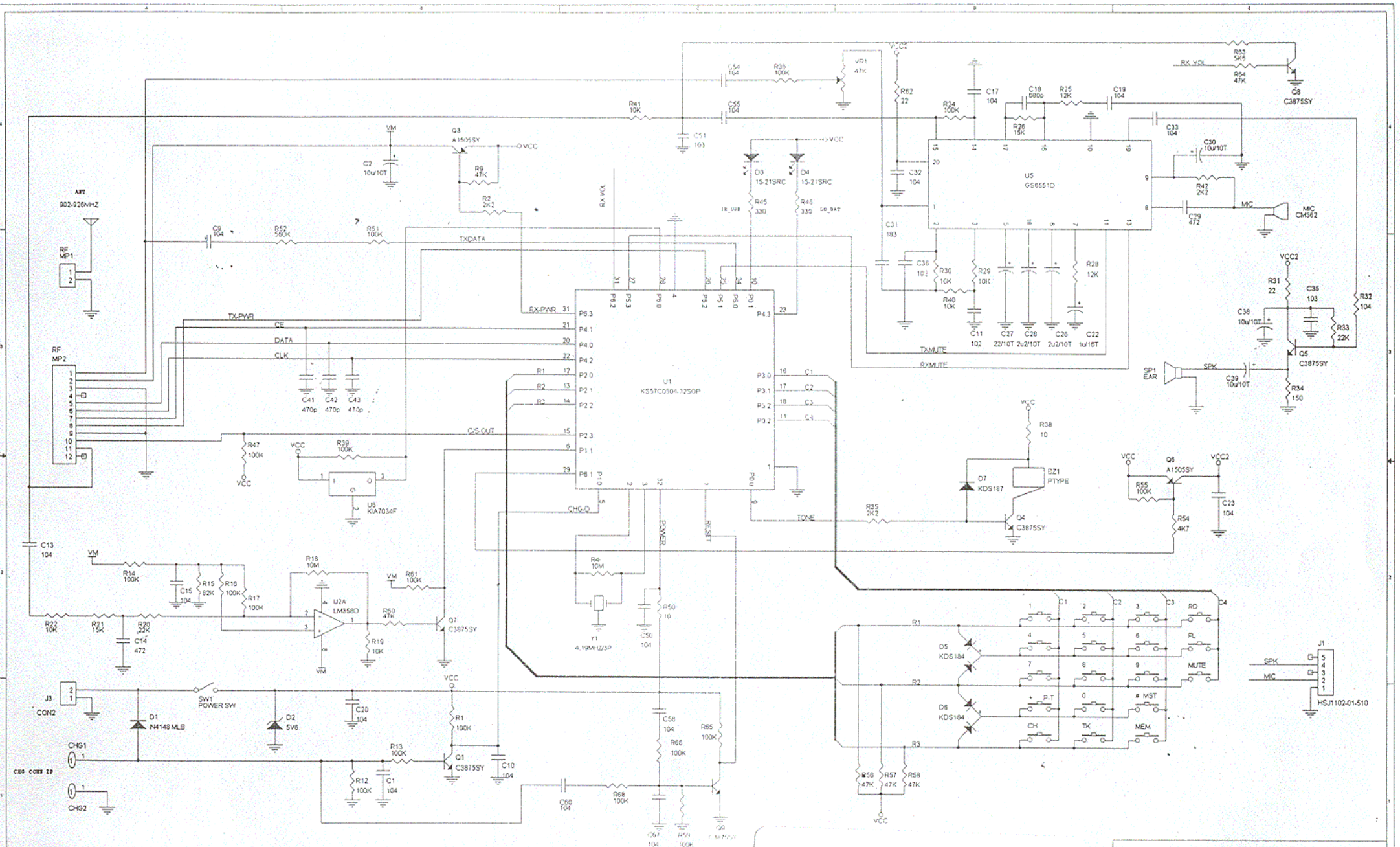

SAMSUNG CORPORATION
FCC ID: LDRSMP-1000
EXHIBIT #: 8

Title	SMP-1000
Size / Custom	Document Number / HANDY MAIN
Rev	
Date	Wednesday, September 15, 1999
Sheet	1 of 1