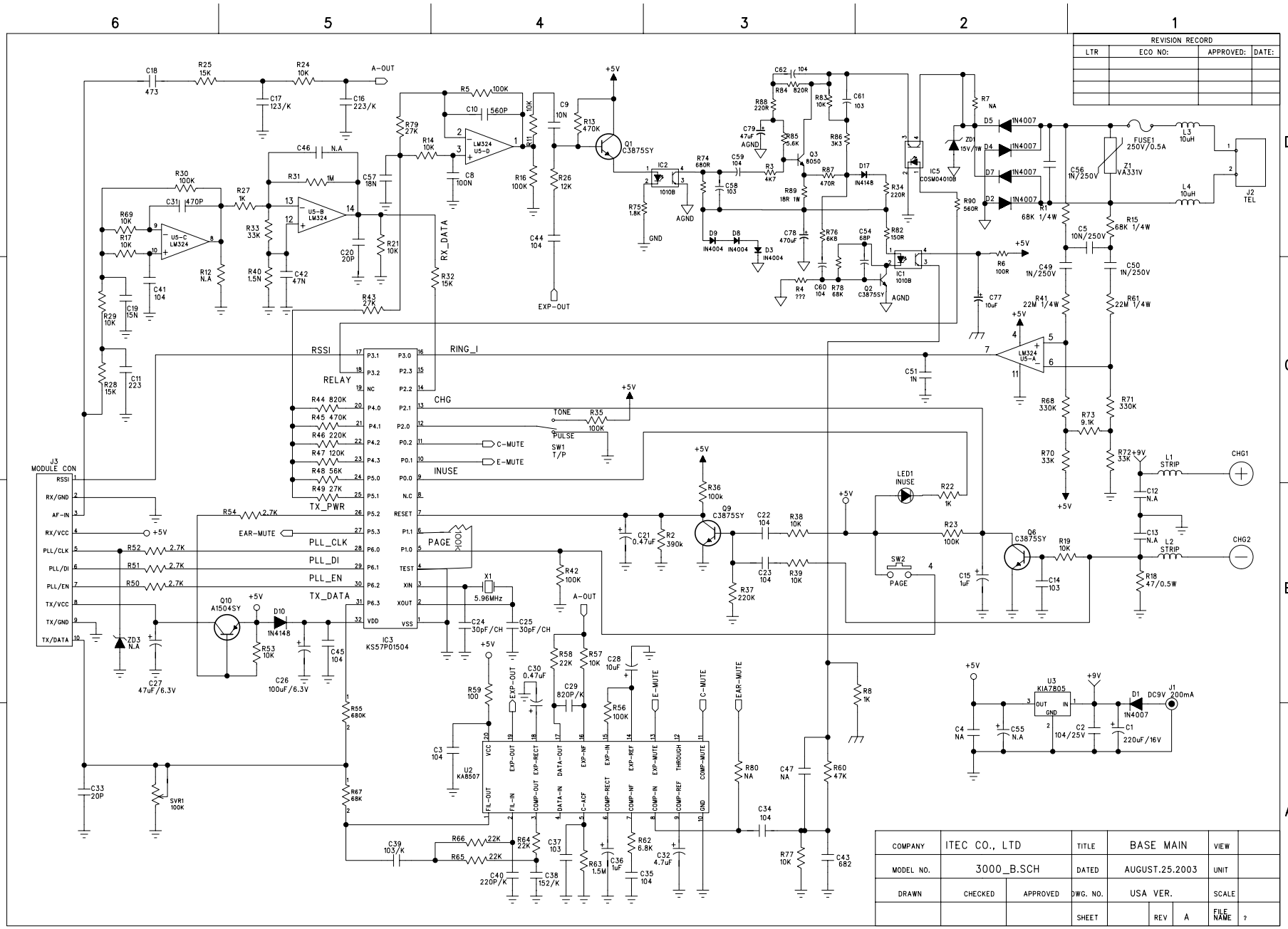
REVISION RECORD
LTR
ECO NO:
APPROVED:
DATE:
COMPANY
ITEC CO., LTD
TITLE
BASE MAIN
VIEW
MODEL NO.
3000_B.SCH
DATED
AUGUST.25.2003
UNIT
DRAWN
CHECKED
APPROVED
DWG. NO.
USA VER.
SCALE
SHEET
REV
A
FILE NAME
IC3
KS57P01504
U2
KA8507
U3
KIA7805
J3
MODULE CON
J2
TEL
J1
DC9V 200mA
CHG1
CHG2
FUSE1
250V/0.5A
Z1
VA331V
IC5
COSM04010B
IC1
1010B
IC2
1010B
Q1
C3875SY
Q2
C3875SY
Q9
C3875SY
Q6
C3875SY
Q10
A1504SY
LED1
INUSE
SW1
T/P
SW2
PAGE
X1
5.96MHz
RELAY
RSSI
RING_I
CHG
TONE
PULSE
C-MUTE
E-MUTE
INUSE
TX_PWR
EAR-MUTE
PLL_CLK
PLL_DI
PLL_EN
TX_DATA
RX_DATA
A-OUT
EXP-OUT
AGND
GND
+5V
+9V

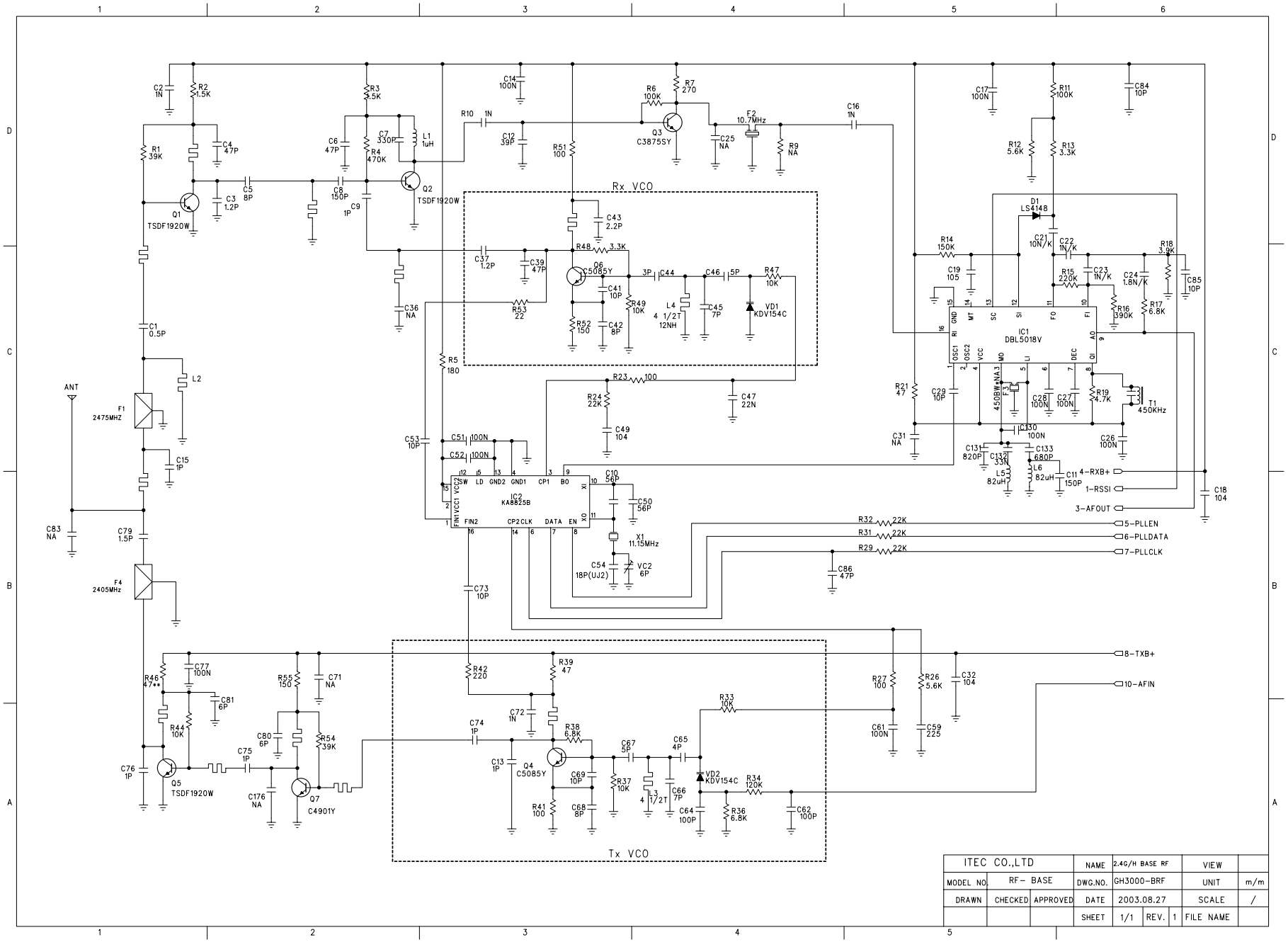

ITEC CO.,LTD			NAME	2.4G/H BASE RF	VIEW	
MODEL NO.	RF- BASE		DWG.NO.	GH3000-BRF	UNIT	m/m
DRAWN	CHECKED	APPROVED	DATE	2003.08.27	SCALE	/
			SHEET	1/1 REV. 1	FILE NAME	

宽带3850RFB-SL-3.sch-1 - Thu Aug 28 09:56:08 2003

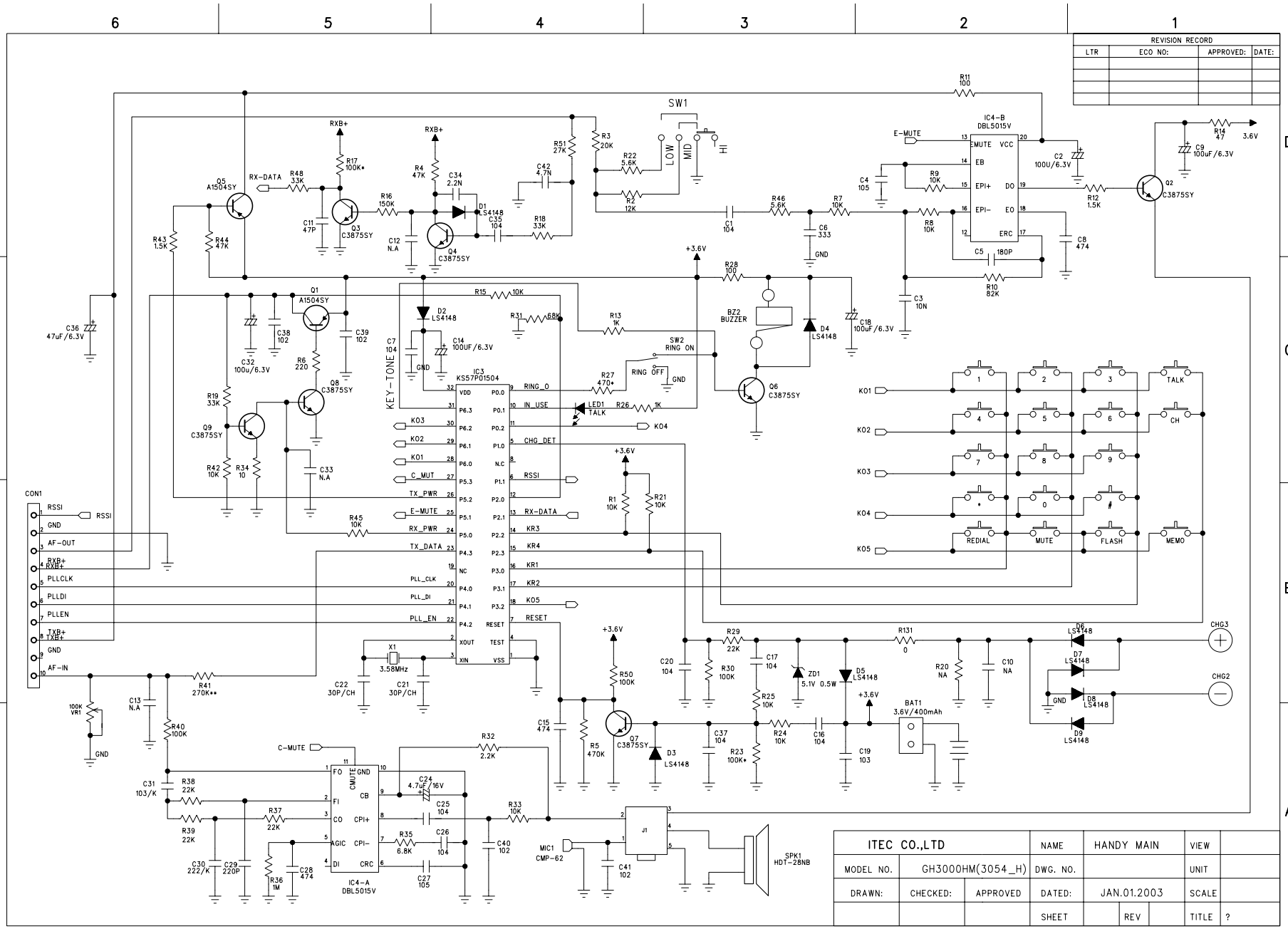
REVISION RECORD
LTR
ECO NO:
APPROVED:
DATE:
SW1
LOW
MID
HI
IC4-B
DBL5015V
E-MUTE
EMUTE
VCC
EB
EPI+
DO
EPI-
EO
ERC
IC4-A
DBL5015V
CMUTE
GND
CB
FI
CPI+
CO
CPI-
AGIC
CRC
DI
FO
IC3
KS57P01504
VDD
P6.3
P6.2
P6.1
P6.0
P5.3
P5.2
P5.1
P5.0
P4.3
NC
P4.0
P4.1
P4.2
XOUT
XIN
P0.0
P0.1
P0.2
P1.0
N.C
P1.1
P2.0
P2.1
P2.2
P2.3
P3.0
P3.1
P3.2
RESET
TEST
VSS
RING_O
IN_USE
CHG_DET
RSSI
RX-DATA
KR3
KR4
KR1
KR2
KO5
RESET
KO1
KO2
KO3
KO4
C_MUT
TX_PWR
E-MUTE
RX_PWR
TX_DATA
PLL_CLK
PLL_DI
PLL_EN
KEY-TONE
CON1
RSSI
GND
AF-OUT
RXB+
PLLCLK
PLLDI
PLLEN
TXB+
GND
AF-IN
RX-DATA
C-MUTE
MIC1
CMP-62
SPK1
HDT-28NB
J1
BZ2
BUZZER
SW2
RING ON
RING OFF
LED1
TALK
BAT1
3.6V/400mAh
CHG3
CHG2
ZD1
5.1V 0.5W
X1
3.58MHz
100K
VR1
TALK
CH
REDIAL
MUTE
FLASH
MEMO
ITEC CO.,LTD
NAME
HANDY MAIN
VIEW
MODEL NO.
GH3000HM(3054_H)
DWG. NO.
UNIT
DRAWN:
CHECKED:
APPROVED
DATED:
JAN.01.2003
SCALE
SHEET
REV
TITLE
?

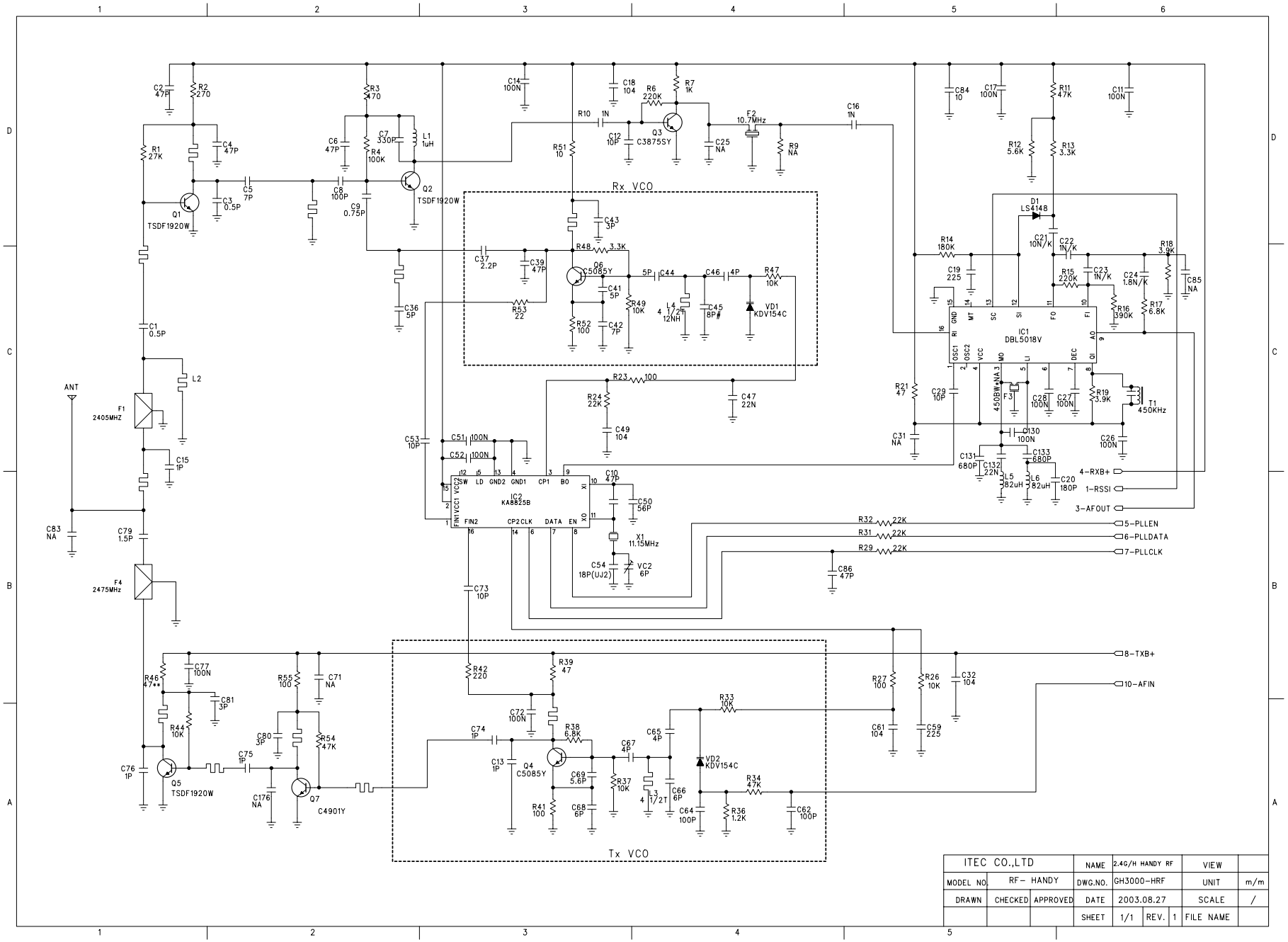

ITEC CO.,LTD			NAME	2.4G/H HANDY RF	VIEW	
MODEL NO.	RF- HANDY		DWG.NO.	GH3000-HRF	UNIT	m/m
DRAWN	CHECKED	APPROVED	DATE	2003.08.27	SCALE	/
			SHEET	1/1	REV. 1	FILE NAME