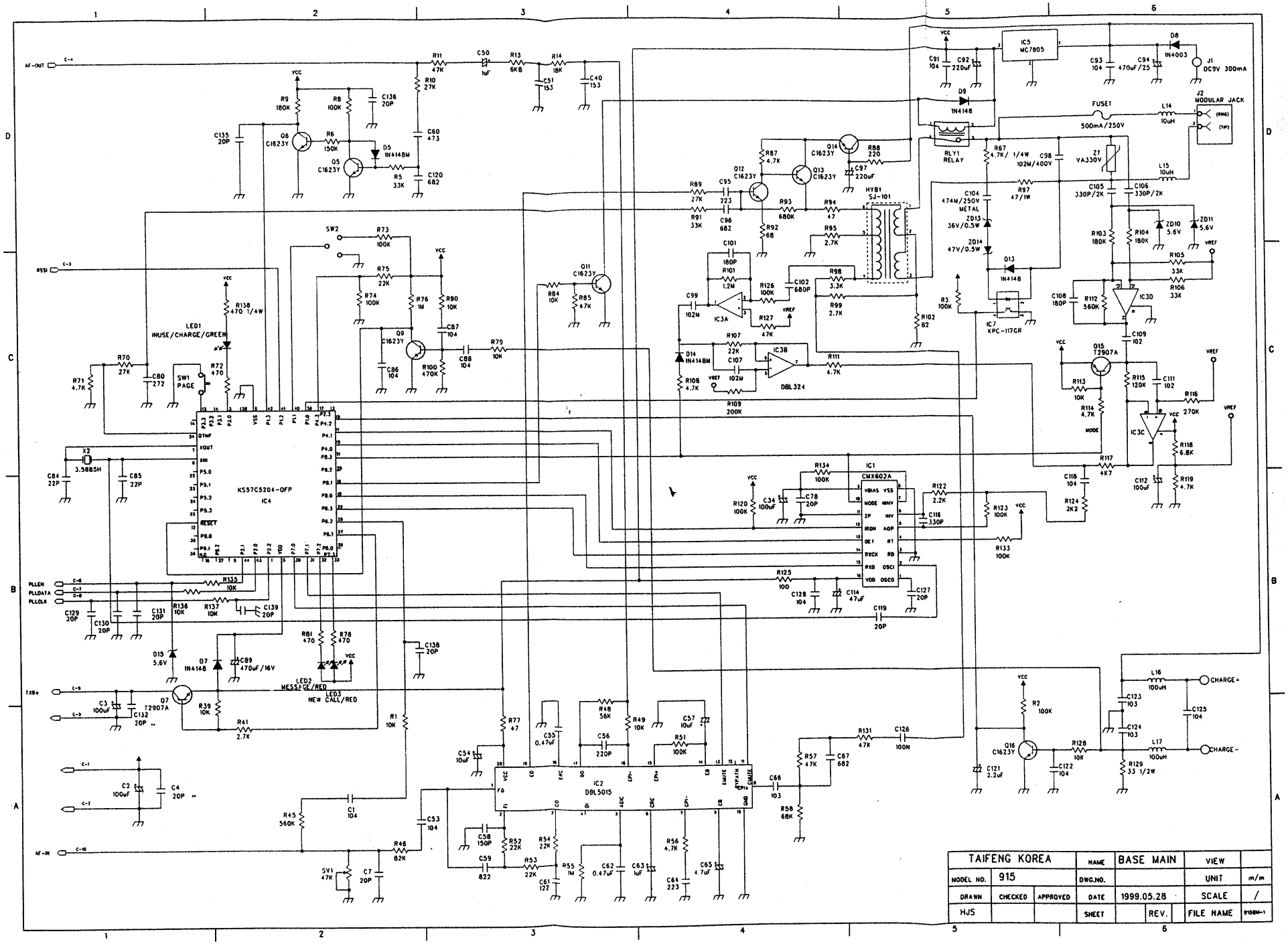

TAIFENG KOREA			NAME	BASE MAIN	VIEW	
MODEL NO.	915		DWG.NO.		UNIT	m/m
DRAWN	CHECKED	APPROVED	DATE	1999.05.28	SCALE	/
HJS			SHEET	REV.	FILE NAME	915BM-1

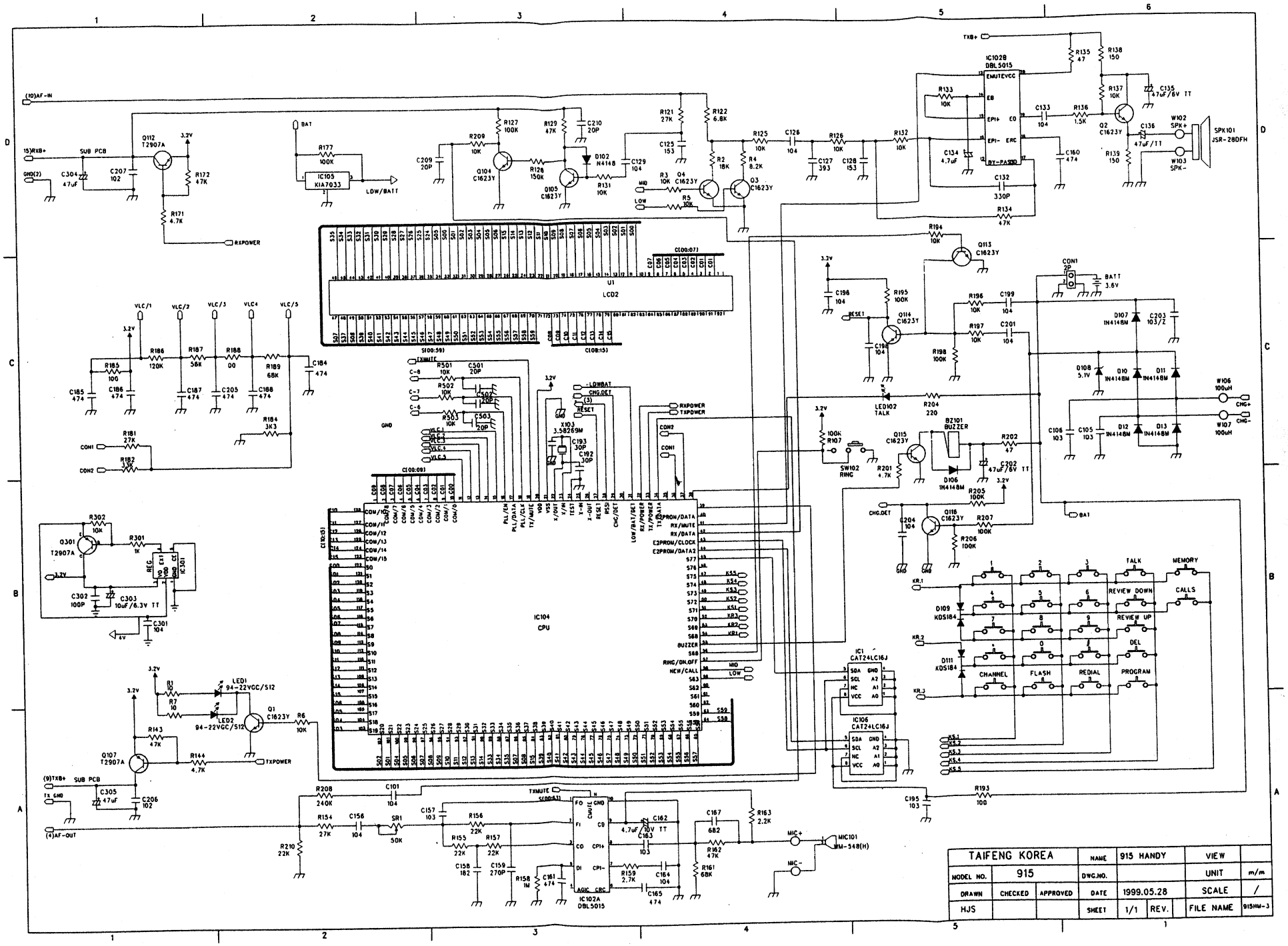
IC104
CPU
U1
LCD2
IC1028
DBL5015
IC102A
DBL5015
IC1
CAT24LC16J
IC106
CAT24LC16J
SPK101
JSR-28DFH
MIC101
WM-34B(H)
BZ101
BUZZER
SW102
RING
LED102
TALK
CON1
2P
BATT
3.6V
TAIFENG KOREA
NAME
915 HANDY
VIEW
MODEL NO.
915
DWG.NO.
UNIT
m/m
DRAWN
CHECKED
APPROVED
DATE
1999.05.28
SCALE
/
HJS
SHEET
1/1
REV.
FILE NAME
915HM-3