NO.	REVISION	DATE	BY
<NO>	<Revision>	<Date:>	<BY:>

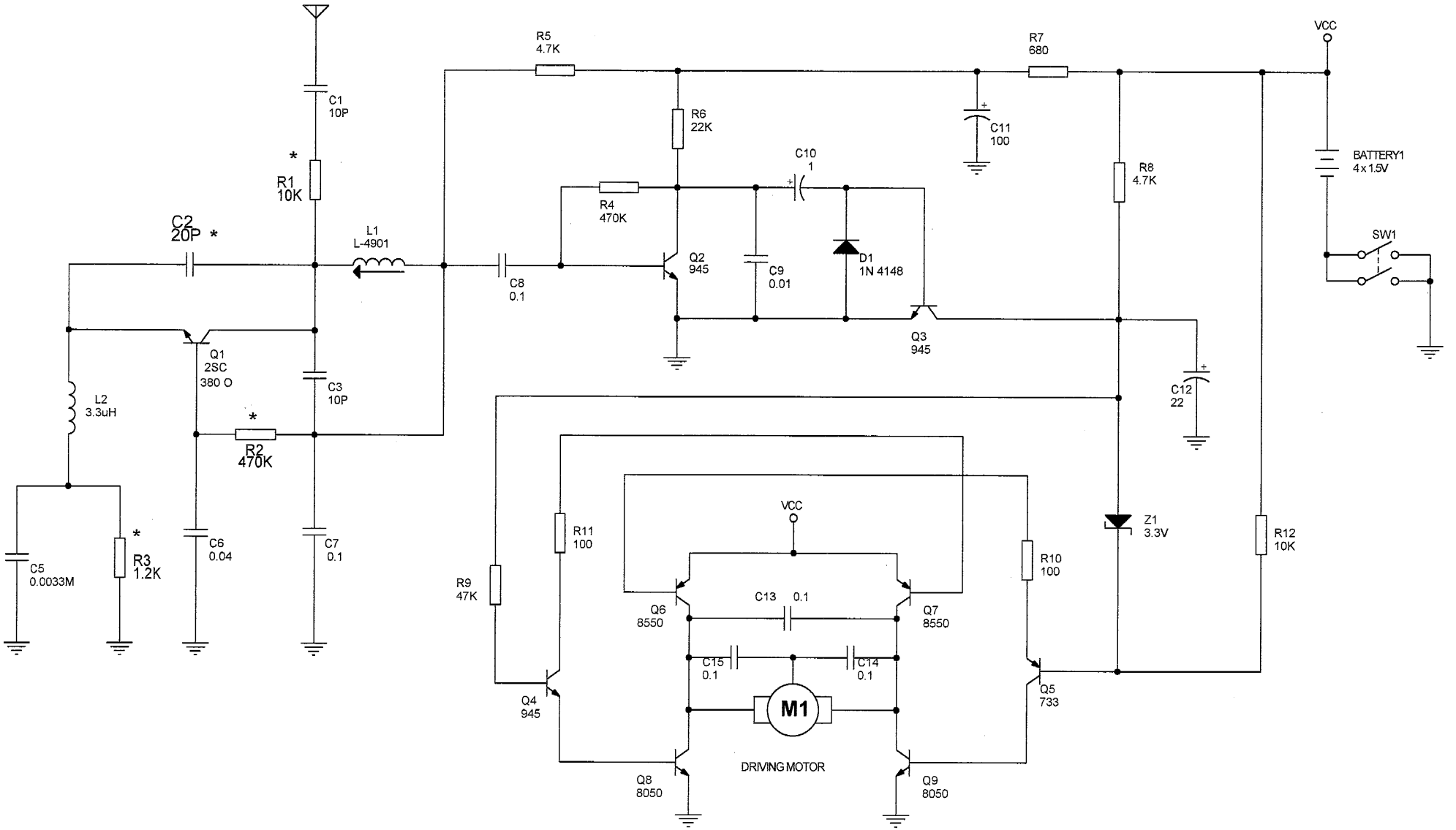

Note:

1. All resistance values are indicated in "ohm"
   (Mohm=1,000Kohm ; Kohm=1,000 ohm)
2. All capacitance values are indictaed in "uF"
   (uF=1,000nF ; nF=1,000pF)

Baja Racer

Model: S8400S

Lab Ltd.,: IECC

Revise: 02

Revise Date: 24-04-2003

V:\R&D\EDDY\RC CAR LAB TEST\1-18RC\1F BAJA RACER S84002\EMC\01R49FCC02.IECCEMC.DSN

ARTIN Industrial Co., Ltd.

Title (BATTERY: 4x1.5V"AA") 24-04-2003

1 : 18 SINGLE FUNCTIONS RADIO CONTROL CAR

Size A4 | Document Number MCS: 317002047 | Rev 02

Receiver 49Mhz (PCB SR-3308)

Revise Date: Wednesday, April 23, 2003 | Sheet 1 of 1

No 33708 25 APR 2003