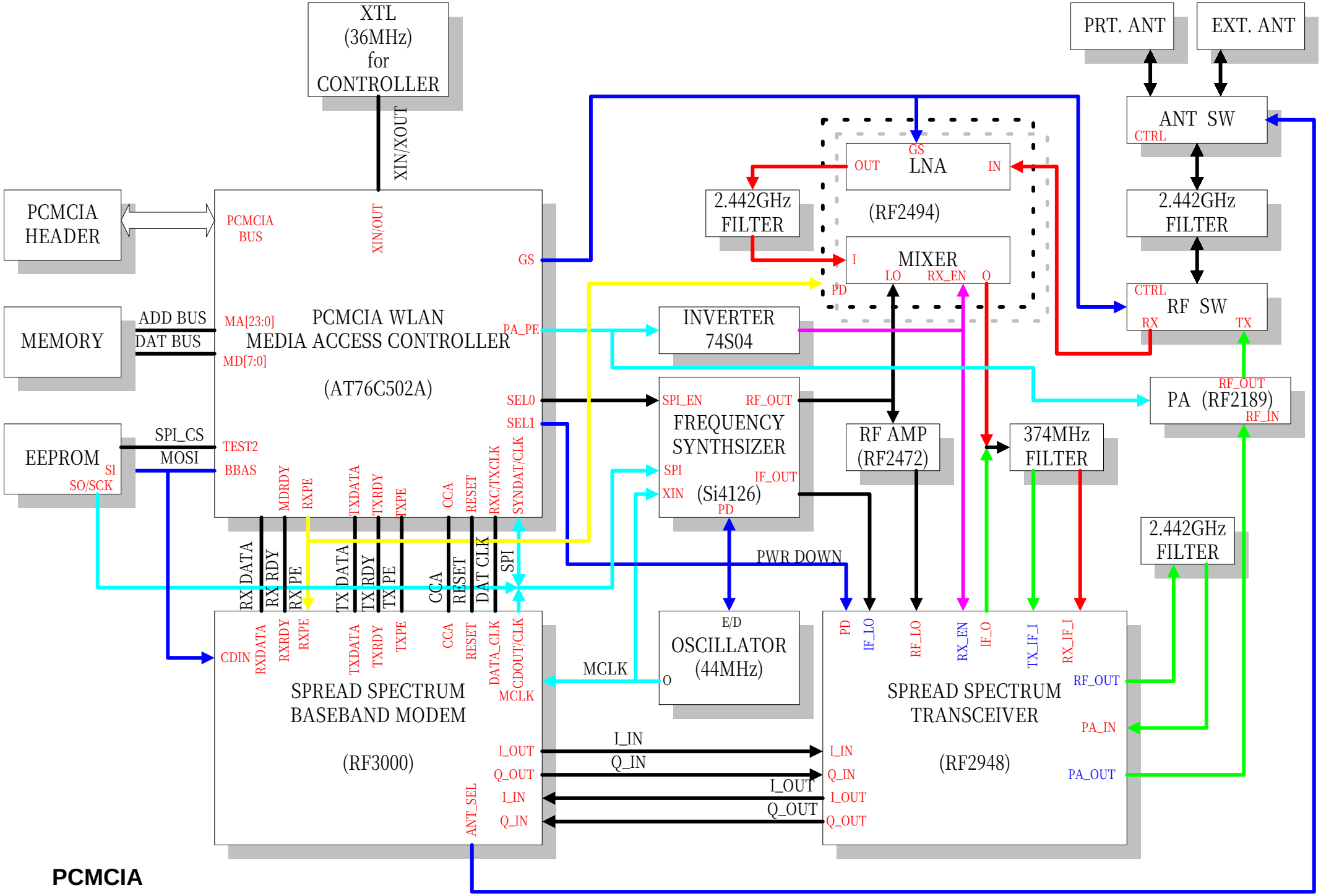

PCMCIA BLOCK DIAGRAM