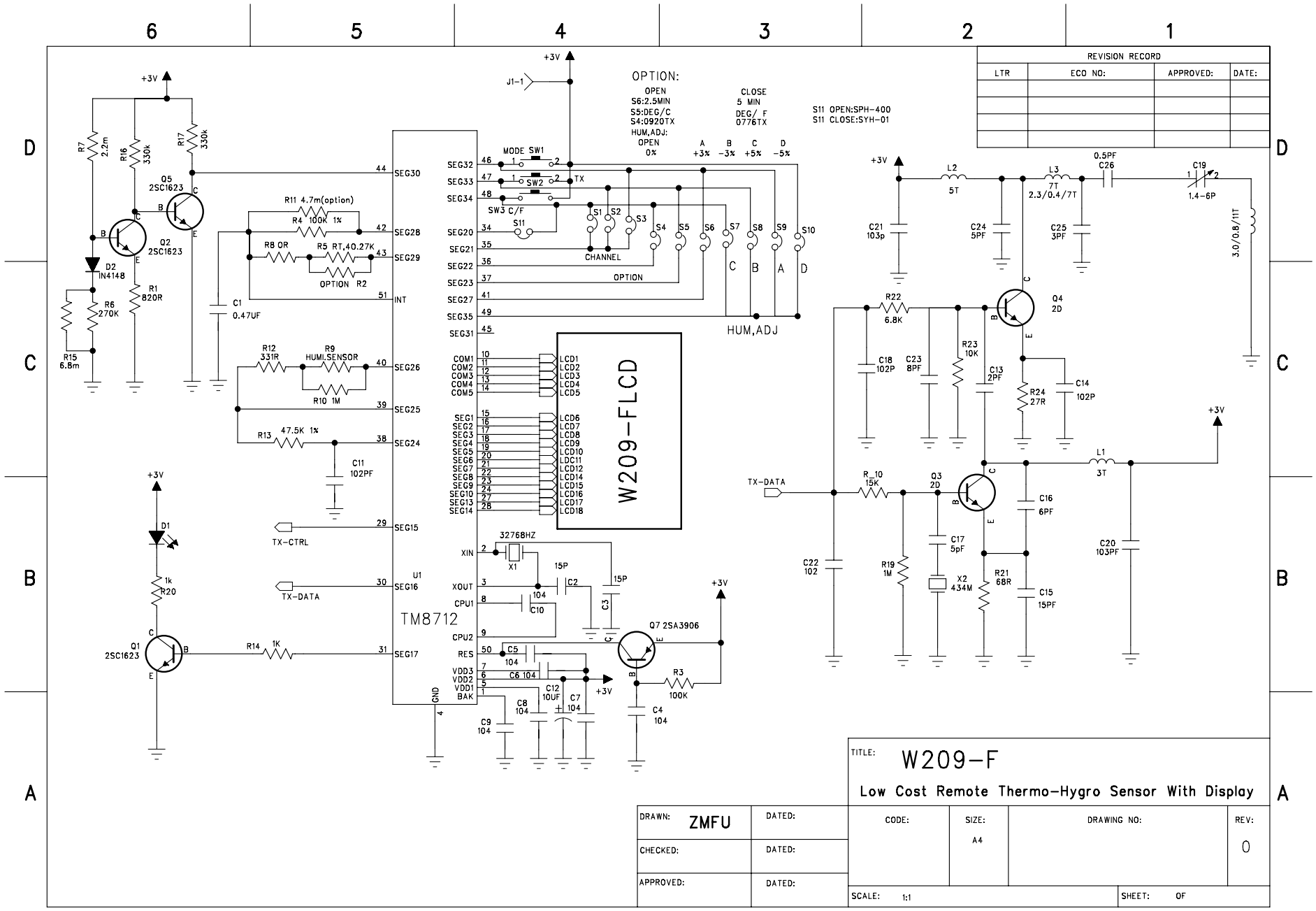

REVISION RECORD			
LTR	ECO NO:	APPROVED:	DATE:

TITLE: W209-F

Low Cost Remote Thermo-Hygro Sensor With Display

DRAWN: ZMFU	DATED:	CODE:	SIZE: A4
CHECKED:	DATED:	DRAWING NO:	REV: 0
APPROVED:	DATED:	SCALE: 1:1	SHEET: OF