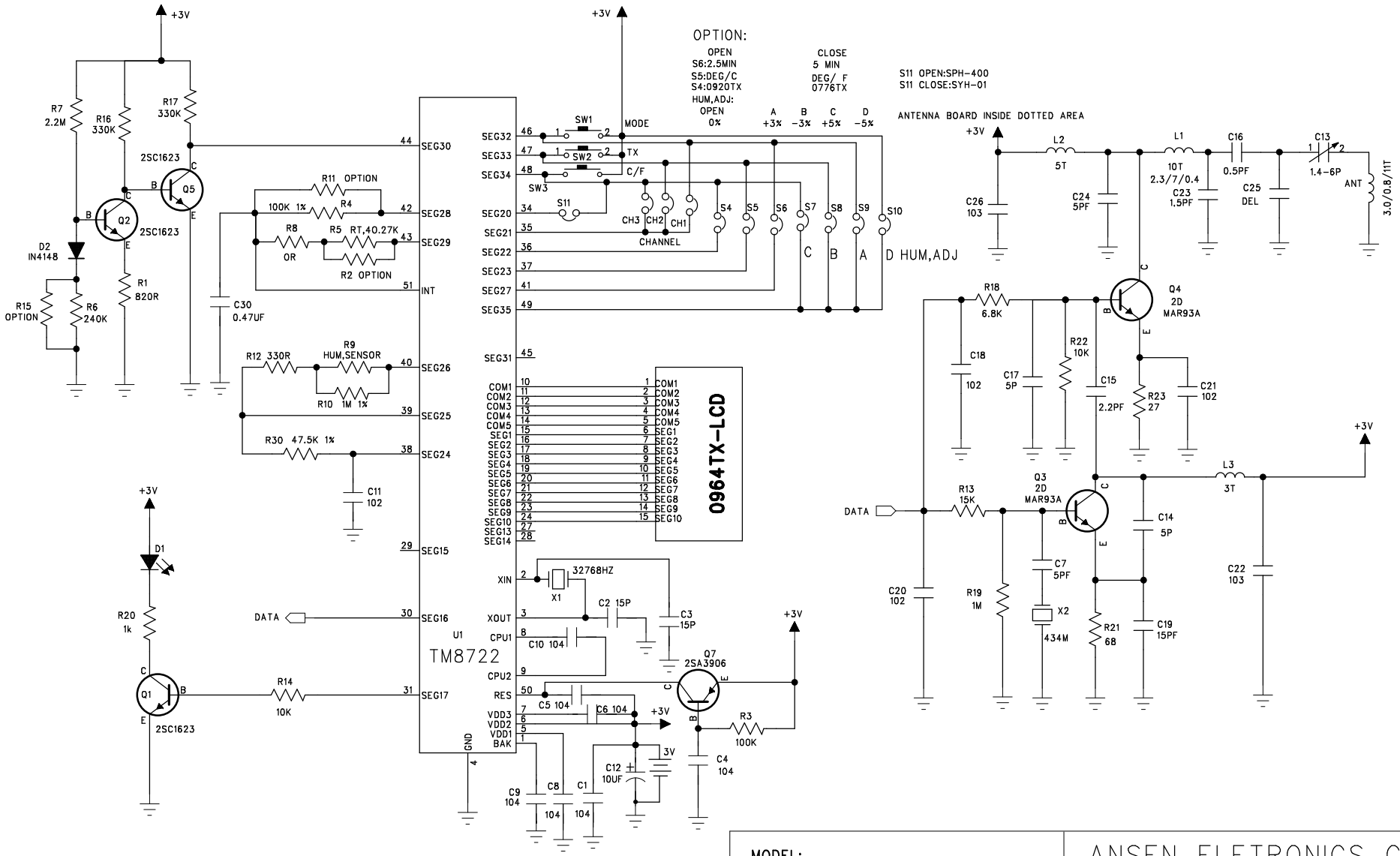

MODEL: #W186-F	ANSEN ELETRONICS COMPANY
DRAW:	MATERIAL: FR4
CHECKED:	THICKEN: 1.0
APPROVED:	UNIT: MM
DATE: 25-Sep-2007	PCB NO: 55-3W186-400

TITLE: REMOTE THERMO HYGRO SENSOR

SIZE:	DOC NO. :	REV:
A4	E-W186-F-SCH01	00

SCALE: SHEET: OF