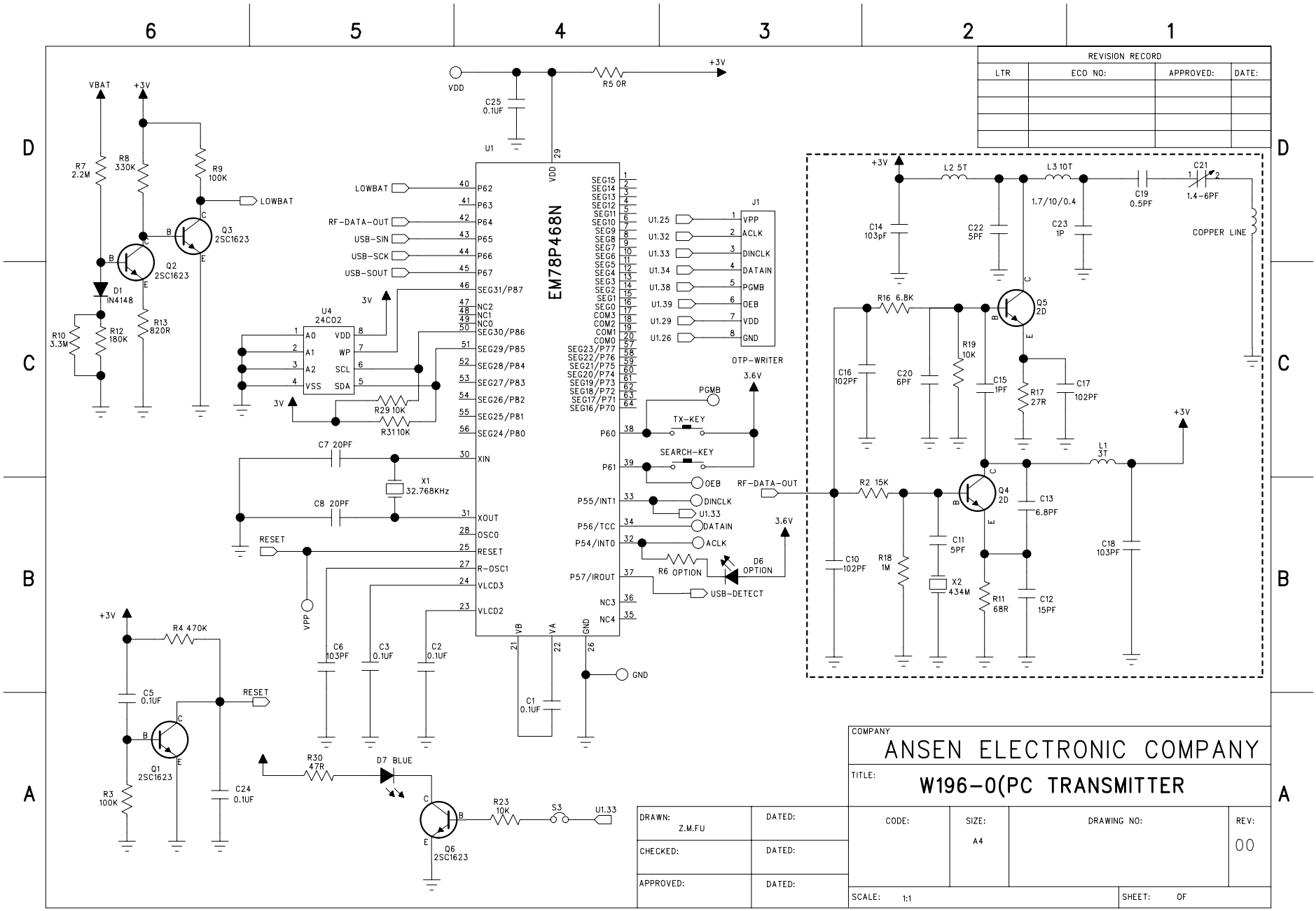

REVISION RECORD			
LTR	ECO NO:	APPROVED:	DATE:

COMPANY
ANSEN ELECTRONIC COMPANY

TITLE:
W196-0(PC TRANSMITTER

DRAWN: Z.M.FU	DATED:	CODE:	SIZE: A4	DRAWING NO:	REV: 00
CHECKED:	DATED:				
APPROVED:	DATED:	SCALE: 1:1		SHEET: OF	

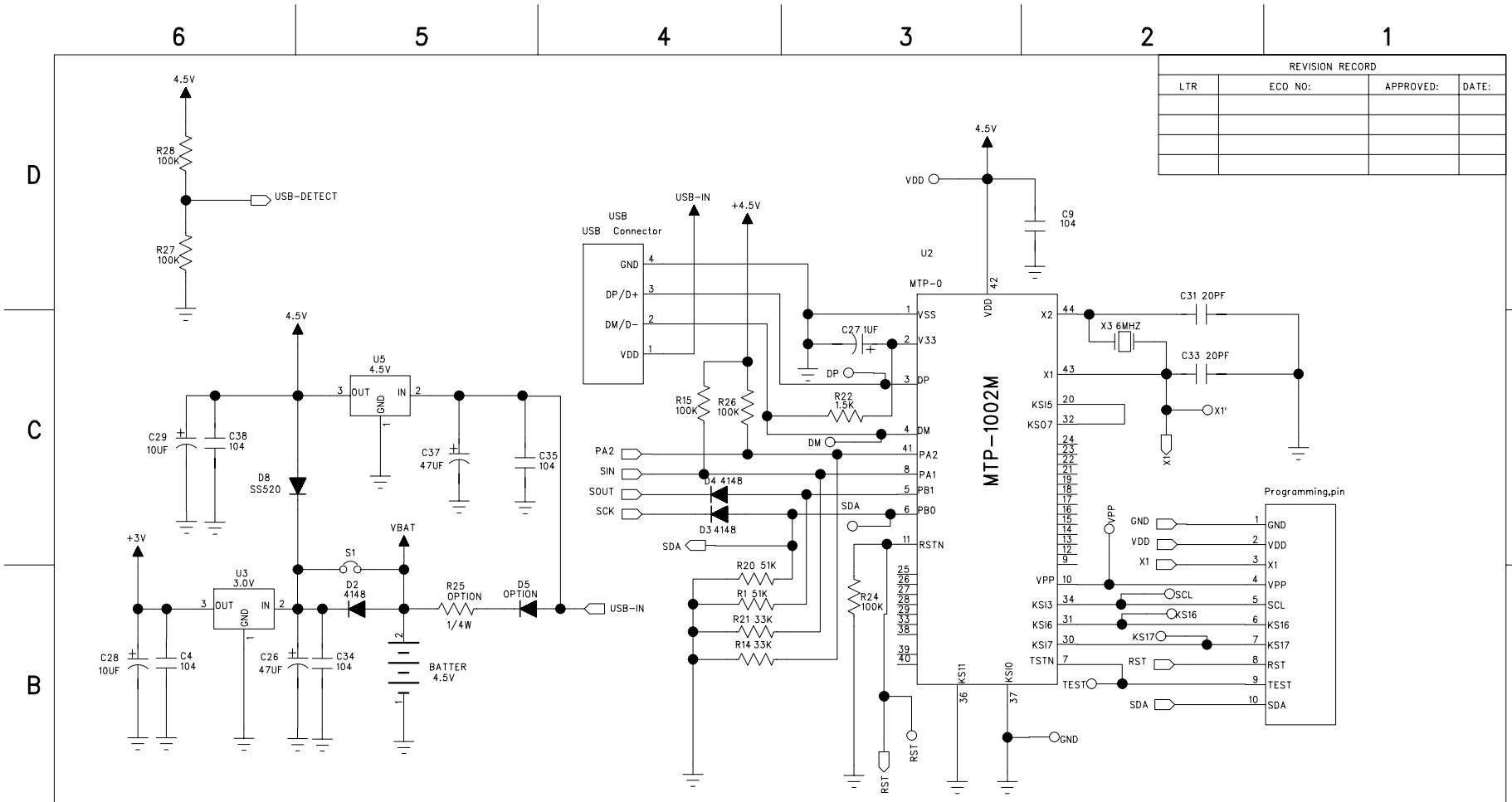

REVISION RECORD			
LTR	ECO NO:	APPROVED:	DATE:

COMPANY: ANSEN ELECTRONIC COMPANY

TITLE: W196-0(PC TRANSMITTER)

DRAWN: Z.M.FU	DATED:	CODE:	SIZE:	DRAWING NO:	REV:
CHECKED:	DATED:				
APPROVED:	DATED:	SCALE:		SHEET: OF	