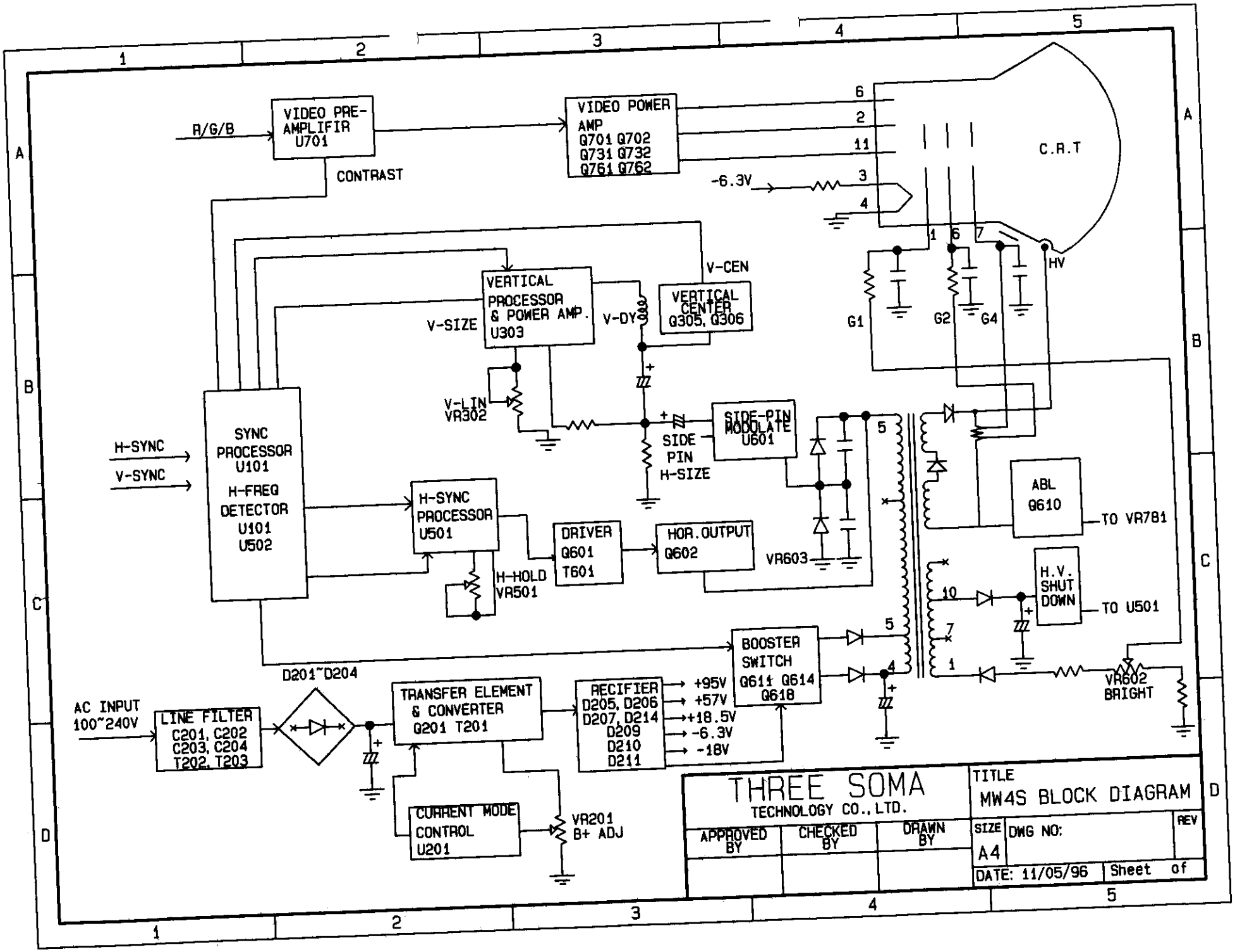
R/G/B
VIDEO PRE-AMPLIFIR U701
CONTRAST
VIDEO POWER AMP Q701 Q702 Q731 Q732 Q761 Q762
-6.3V
C.R.T
HV
G1
G2
G4
VERTICAL PROCESSOR & POWER AMP. U303
V-SIZE
V-DY
VERTICAL CENTER Q305, Q306
V-CEN
V-LIN VR302
SIDE PIN H-SIZE
SIDE-PIN MODULATE U601
H-SYNC
V-SYNC
SYNC PROCESSOR U101
H-FREQ DETECTOR U101 U502
H-SYNC PROCESSOR U501
H-HOLD VR501
DRIVER Q601 T601
HOR.OUTPUT Q602
VR603
ABL Q610
TO VR781
H.V. SHUT DOWN
TO U501
BOOSTER SWITCH Q611 Q614 Q618
VR602 BRIGHT
D201~D204
AC INPUT 100~240V
LINE FILTER C201, C202 C203, C204 T202, T203
TRANSFER ELEMENT & CONVERTER Q201 T201
RECIFIER D205, D206 D207, D214 D209 D210 D211
+95V
+57V
+18.5V
-6.3V
-18V
CURRENT MODE CONTROL U201
VR201 B+ ADJ
THREE SOMA
TECHNOLOGY CO., LTD.
TITLE
MW4S BLOCK DIAGRAM
APPROVED BY
CHECKED BY
DRAWN BY
SIZE A4
DWG NO:
REV
DATE: 11/05/96
Sheet of

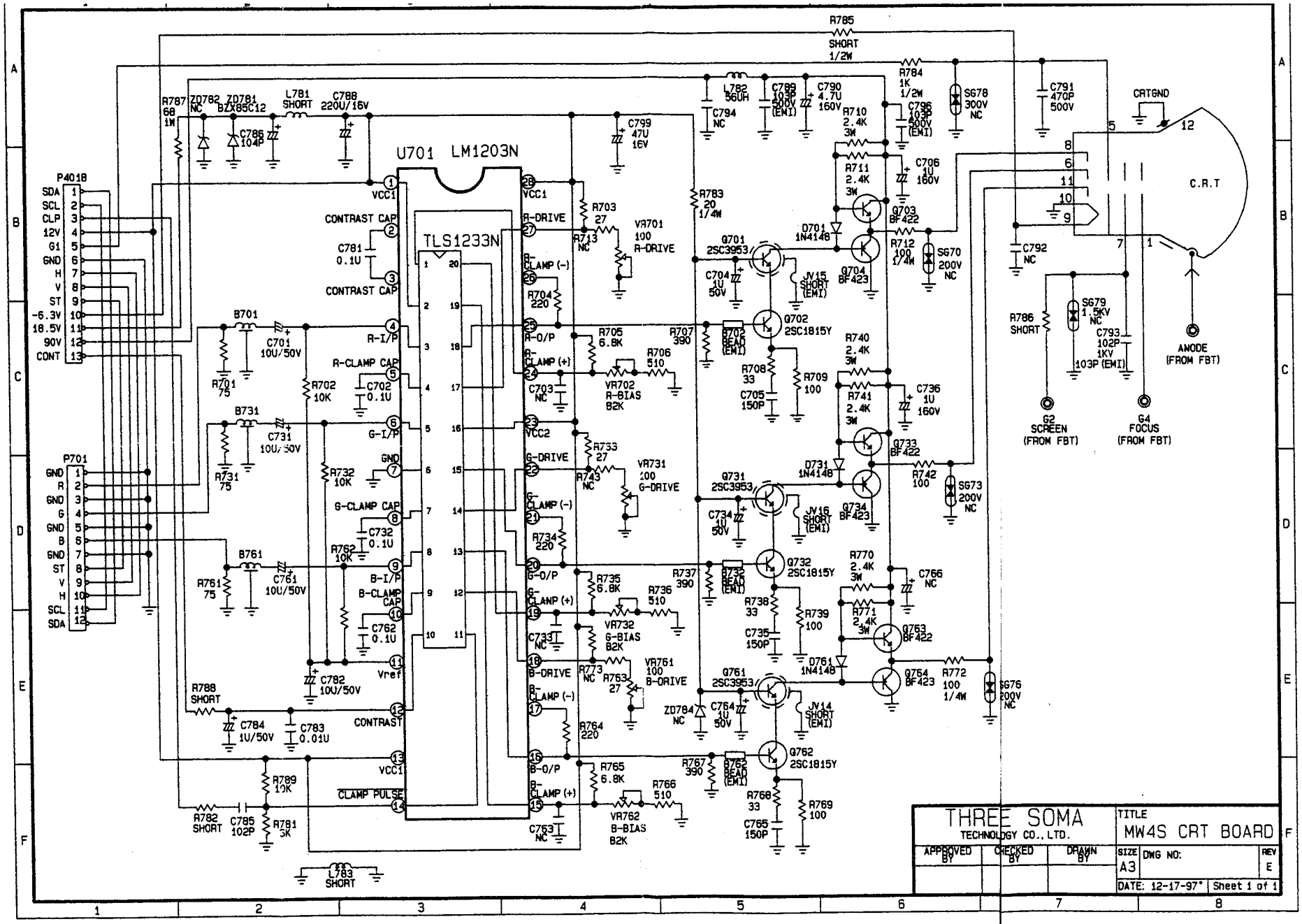
U701 LM1203N
TLS1233N
P4018
SDA
SCL
CLP
12V
G1
GND
H
V
ST
-6.3V
18.5V
90V
CONT
P701
GND
R
GND
G
GND
B
GND
ST
V
H
SCL
SDA
VCC1
CONTRAST CAP
CONTRAST CAP
R-I/P
R-CLAMP CAP
G-I/P
GND
G-CLAMP CAP
B-I/P
B-CLAMP CAP
Vref
CONTRAST
VCC1
CLAMP PULSE
R-DRIVE
R-CLAMP (-)
R-O/P
R-CLAMP (+)
VCC2
G-DRIVE
G-CLAMP (-)
G-O/P
G-CLAMP (+)
B-DRIVE
B-CLAMP (-)
B-O/P
B-CLAMP (+)
VR701 100 R-DRIVE
VR702 R-BIAS 82K
VR731 100 G-DRIVE
VR732 G-BIAS 82K
VR761 100 B-DRIVE
VR762 B-BIAS 82K
Q701 2SC3953
Q702 2SC1815Y
Q731 2SC3953
Q732 2SC1815Y
Q761 2SC3953
Q762 2SC1815Y
Q703 BF422
Q704 BF423
Q733 BF422
Q734 BF423
Q763 BF422
Q764 BF423
D701 1N4148
D731 1N4148
D761 1N4148
JV15 SHORT (EMI)
JV16 SHORT (EMI)
JV14 SHORT (EMI)
B702 BEAD (EMI)
B732 BEAD (EMI)
B762 BEAD (EMI)
SG70 200V NC
SG73 200V NC
SG76 200V NC
SG78 300V NC
SG79 1.5KV NC
R785 SHORT 1/2W
R784 1K 1/2W
R787 68 1W
ZD782 NC
ZD781 BZX85C12
L781 SHORT
C788 220U/16V
C786 104P
C799 47U 16V
L782 56UH
C794 NC
C789 103P 500V (EMI)
C790 4.7U 160V
C795 103P 500V (EMI)
C791 470P 500V
C792 NC
C793 102P 1KV 103P (EMI)
C706 1U 160V
C736 1U 160V
C766 NC
R710 2.4K 3W
R711 2.4K 3W
R712 100 1/4W
R740 2.4K 3W
R741 2.4K 3W
R742 100
R770 2.4K 3W
R771 2.4K 3W
R772 100 1/4W
R783 20 1/4W
R786 SHORT
CATGND
C.R.T
ANODE (FROM FBT)
G2 SCREEN (FROM FBT)
G4 FOCUS (FROM FBT)
B701
C701 10U/50V
R701 75
R702 10K
C702 0.1U
C781 0.1U
B731
C731 10U/50V
R731 75
R732 10K
C732 0.1U
R762 10K
B761
C761 10U/50V
R761 75
C762 0.1U
C782 10U/50V
R788 SHORT
C784 1U/50V
C783 0.01U
R789 10K
R782 SHORT
C785 102P
R781 5K
L783 SHORT
R703 27
R713 NC
R704 220
R705 6.8K
R706 510
C703 NC
R707 390
R708 33
C705 150P
R709 100
C704 1U 50V
R733 27
R743 NC
R734 220
R735 6.8K
R736 510
C733 NC
R737 390
R738 33
C735 150P
R739 100
C734 1U 50V
R773 NC
R763 27
R764 220
R765 6.8K
R766 510
C753 NC
R767 390
R768 33
C765 150P
R769 100
ZD784 NC
C764 1U 50V
THREE SOMA
TECHNOLOGY CO., LTD.
TITLE
MW4S CRT BOARD
APPROVED BY
CHECKED BY
DRAWN BY
SIZE A3
DWG NO:
REV E
DATE: 12-17-97
Sheet 1 of 1

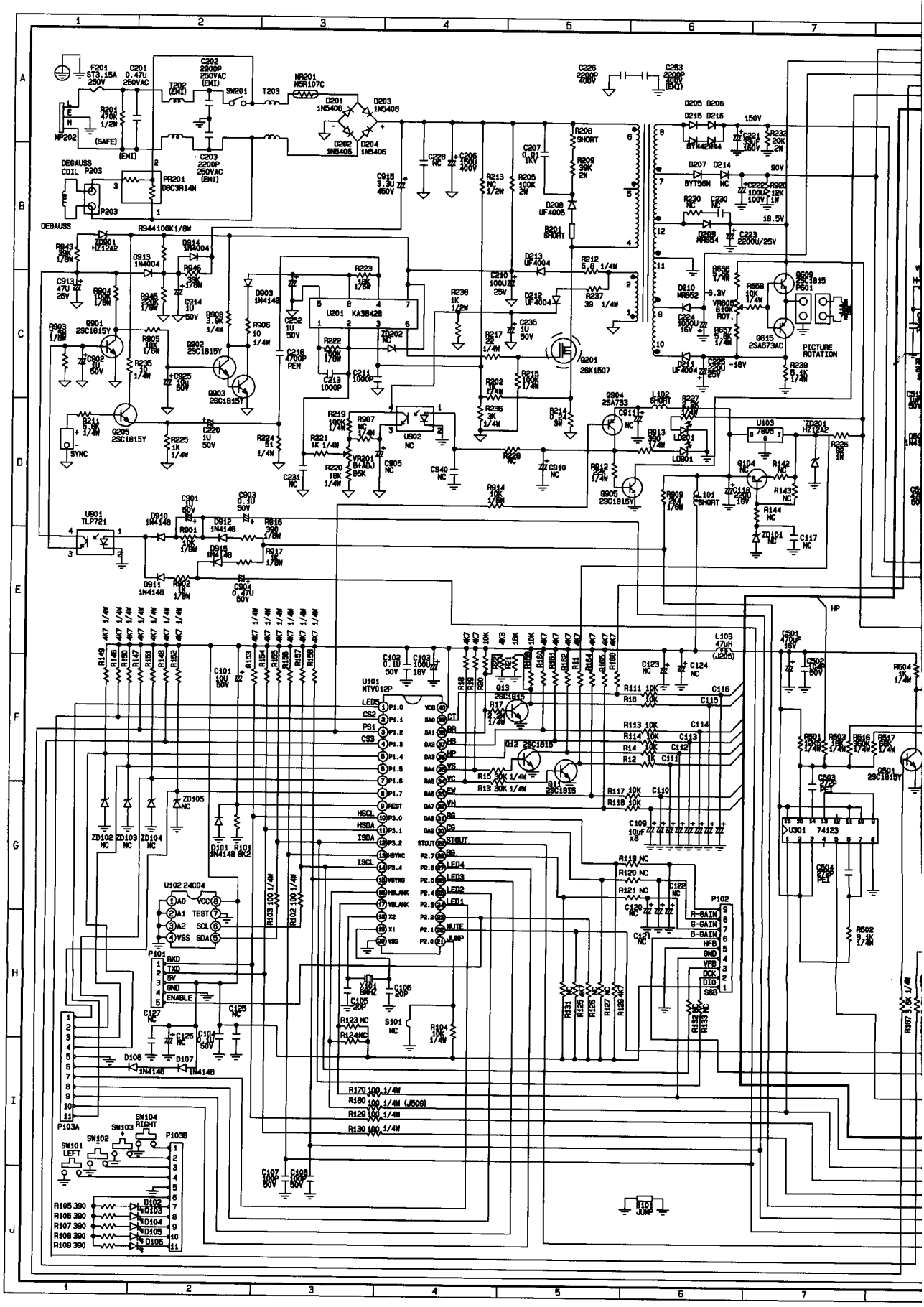
F201 ST3.15A 250V
C201 0.47U 250VAC
C202 2200P 250VAC (EMI)
T202 (EMI)
SW201
T203
NR201 NSR107C
D201 1N5406
D202 1N5406
D203 1N5406
D204 1N5406
NP202
(SAFE)
(EMI)
C203 2200P 250VAC (EMI)
DEGAUSS COIL P203
PR201 D6C3R14N
P203
DEGAUSS
R944 100K 1/8W
ZD901 HZ12A2
D913 1N4004
D914 1N4004
C913 470U 25V
R904 100K 1/8W
R945 220K 1/8W
C914 1U 50V
Q901 2SC1815Y
R905 10K 1/8W
Q902 2SC1815Y
R906 10 1/4W
D903 1N4148
R908 3.9K 1/4W
Q903 2SC1815Y
C902 1U 50V
C925 50V
R235 10 1/4W
Q205 2SC1815Y
R211 5.6K 1/4W
SYNC
R225 1K 1/4W
C220 1U 50V
R224 51 1/4W
C231 NC
R223 18K 1/8W
U201 KA3842B
C252 1U 50V
R222 18K 1/8W
ZD202 NC
C216 4700P PEN
C213 1000P
C211 1000P
R219 100K 1/4W
R907 NC 1/4W
R221 1K 1/4W
VR201 B+ADJ 95K
R220 10K 1/4W
C905 NC
U902 NC
C940 NC
R228 NC
C910 NC
R914 10K 1/8W
C226 2200P 400V
C253 2200P 400V (EMI)
C228 NC
C206 150U 400V
C915 3.3U 450V
R213 NC 1/2W
R205 100K 2W
C207 0.1U 1KV
R208 SHORT
R209 39K 2W
D208 UF4005
R201 SHORT
D213 UF4004
R212 6.8 1/4W
C210 100U/ZZ 25V
D212 UF4004
R237 39 1/4W
R236 1K 1/2W
C235 1U 50V
R217 22 1/4W
Q201 2SK1507
R202 1M 1/4W
R215 100K 1/4W
R236 3K 1/4W
R214 0.24 3W
Q904 2SA733
C911 NC
L102 SHORT
R227 1M 1/4W
R913 360 1/4W
LD901
R912 220 1/4W
Q905 2SC1815Y
R909 3K 1/8W
L101 SHORT
C118 2200 16V
R143 NC
R144 NC
ZD104 NC
C117 NC
U103 7805
ZD201 HZ12A2
R225 5.6 1W
Q104 NC
R142 NC
D205 D206
D215 D216
BYK42004
150V
C221 33UF 160V
R232 20K 2W
D207 D214
BYT56M NC
90V
C222 100U 100V
R920 12K 1W
R230 NC
C230 NC
18.5V
D209 MR854
C223 2200U/25V
R656 5.6K 1/4W
R658 10K 1/4W
Q609 2SC1815 P601
D210 MR852
-6.3V
VR605 510K ROT.
C224 1000U 16V
R657 5.6K 1/4W
Q615 2SA673AC
PICTURE ROTATION
D214 UF4004
C225 2200 25V
-16V
R239 5.6K 1/4W
C901 50V
C903 0.1U 50V
U901 TLP721
D910 1N4148
R901 10K 1/8W
D912 1N4148
R916 390 1/8W
D915 1N4148
R917 1K 1/8W
D911 1N4148
R902 1K 1/8W
C904 0.47U 50V
R149 4K7 1/4W
R146 4K7 1/4W
R150 4K7 1/4W
R147 4K7 1/4W
R151 4K7 1/4W
R148 4K7 1/4W
R152 4K7 1/4W
C101 10U 50V
R153 4K7 1/4W
R154 4K7 1/4W
R155 4K7 1/4W
R156 4K7 1/4W
R157 4K7 1/4W
R158 4K7 1/4W
C102 0.1U 50V
C103 1000U 16V
U101 MTV012P
LED5
CS2
PS1
CS3
HSCL
HSDA
ISDA
ISCL
STOUT
LED4
LED3
LED2
LED1
MUTE
JUMP
R18 4K7
R19 10K
R20 10K
R21 4K3
R22 10K
R159 10K
R160 4K7
R161 4K7
R162 4K7
R11 4K7
R164 4K7
R165 4K7
R166 4K7
Q13 2SC1815
R17 2.2K 1/4W
Q12 2SC1815
R15 30K 1/4W
R13 30K 1/4W
Q11 2SC1815
C123 NC
C124 NC
L103 47UH (J205)
C501 470UF 16V
C502 10UF 50V
R504 1K 1/4W
R111 10K
R16 10K
C116
C115
R113 10K
C114
R114 10K
C113
R14 10K
C112
R12 10K
C111
R117 10K
C110
R118 10K
C109 10UF X8
R501 1K 1/4W
R503 1K 1/4W
R516 390K 1/4W
R517 1K 1/4W
Q501 2SC1815Y
C503 PET
U301 74123
C504 PET
ZD105 NC
ZD102 NC
ZD103 NC
ZD104 NC
D101 1N4148
R101 8K2
U102 24C04
A0
A1
A2
VSS
VCC
TEST
SCL
SDA
R103 100 1/4W
R102 100 1/4W
P101
RXD
TXD
5V
GND
ENABLE
X101 8MHZ
C105 20P
C106 20P
S101 NC
R104 10K 1/4W
R123 NC
R124 NC
C127 NC
C125 NC
C126 NC
C104 0.1U 50V
D108 1N4148
D107 1N4148
R131
R125 NC
R126 NC
R127 NC
R128 4K7
R132 NC
R133 NC
P102
R-GAIN
G-GAIN
B-GAIN
HFB
GND
VFB
DCK
DIO
SSB
R502 9.1K 1/4W
R567 3.6K 1/4W
R170 100 1/4W
R180 100 1/4W (J509)
R129 100 1/4W
R130 100 1/4W
C107 100U 50V
C108 100U 50V
P103A
SW104 RIGHT
SW103
SW102
SW101 LEFT
P103B
R105 390
R106 390
R107 390
R108 390
R109 390
D102
D103
D104
D105
S101 JUMP
HP

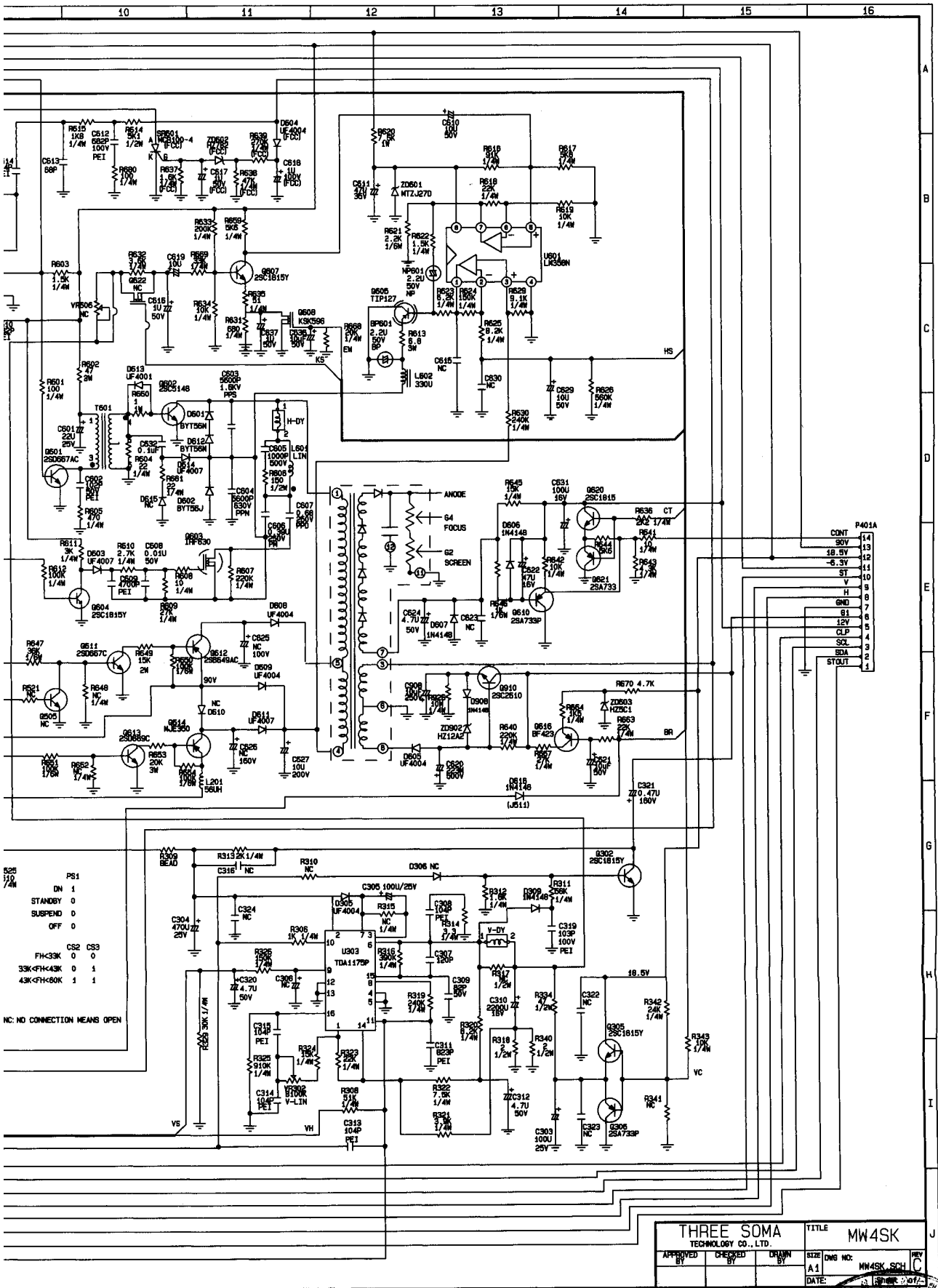
P401A
CONT
90V
18.5V
-6.3V
ST
V
H
GND
G1
12V
CLP
SCL
SDA
STOUT
ANODE
G4
FOCUS
G2
SCREEN
HS
VC
VS
VH
BR
KS
EM
H-DY
V-DY
U601
LM358N
Q605
TIP127
U303
TDA1175P
Q302
2SC1815Y
Q305
2SC1815Y
Q306
2SA733P
Q601
2SD667AC
Q603
IRF830
Q610
2SA733P
Q620
2SC1815
Q621
2SA733
Q910
2SC2610
Q616
BF423
Q614
MJE350
Q613
2SD669C
Q511
2SD667C
Q512
2SB649AC
Q604
2SC1815Y
Q505
NC
Q807
2SC1815Y
Q602
2SC5148
T601
L601
LIN
L602
330U
L201
560UH
L603
H25C1
ZD603
ZD601
MTZJ27D
ZD902
HZ12A2
D615
1N4148
(J511)
D608
K9G596
D613
UF4001
D604
UF4004
D605
UF4004
D606
1N4148
D607
1N414B
D609
UF4004
D611
UF4007
D612
BYT56M
D614
UF4007
D601
BYT56M
D602
BYT56J
D603
UF4007
D509
UF4004
D305
UF4004
D306 NC
D309
1N4148
D908
1N4148
PS1
DN 1
STANDBY 0
SUSPEND 0
OFF 0
CS2 CS3
FH<33K 0 0
33K<FH<43K 0 1
43K<FH<60K 1 1
NC: NO CONNECTION MEANS OPEN
THREE SOMA
TECHNOLOGY CO., LTD.
APPROVED BY
CHECKED BY
DRAWN BY
TITLE
MW4SK
SIZE
A1
DWG NO:
MW4SK.SCH
REV
C
DATE:
SHEET 1 of 1
弘怡科技股份有限公司
88.4.08
技術處發行章
圖面管制章