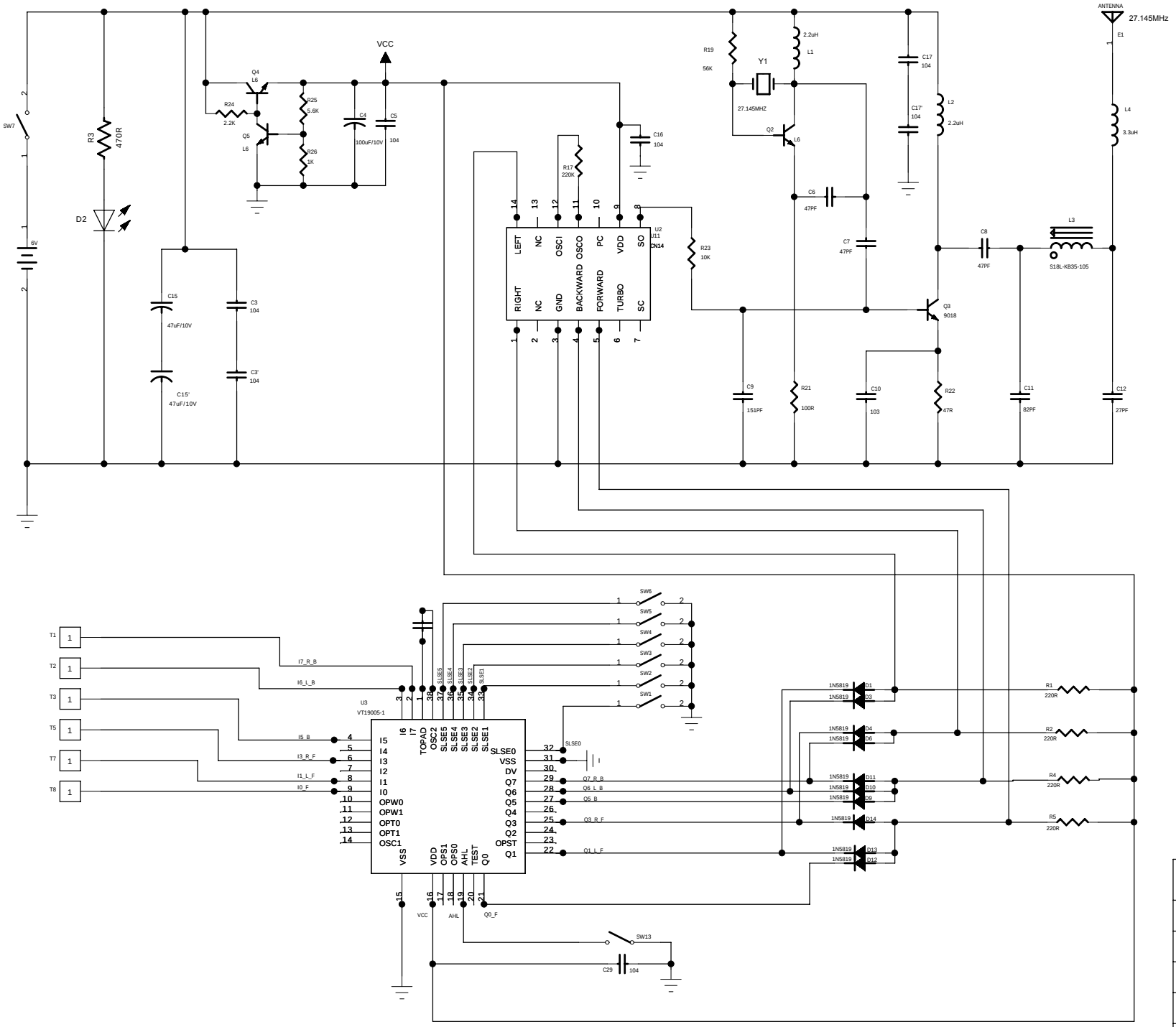

SUPERTOYS INDUCTRIAL CO, LTD.	
MODEL:	7066 TX27.145MHZ
DRAWN BY:	DATE:
CHECK BY:	DATE:
APPROVE BY:	DATE:
SHEET:	TITLE: Touch Toy