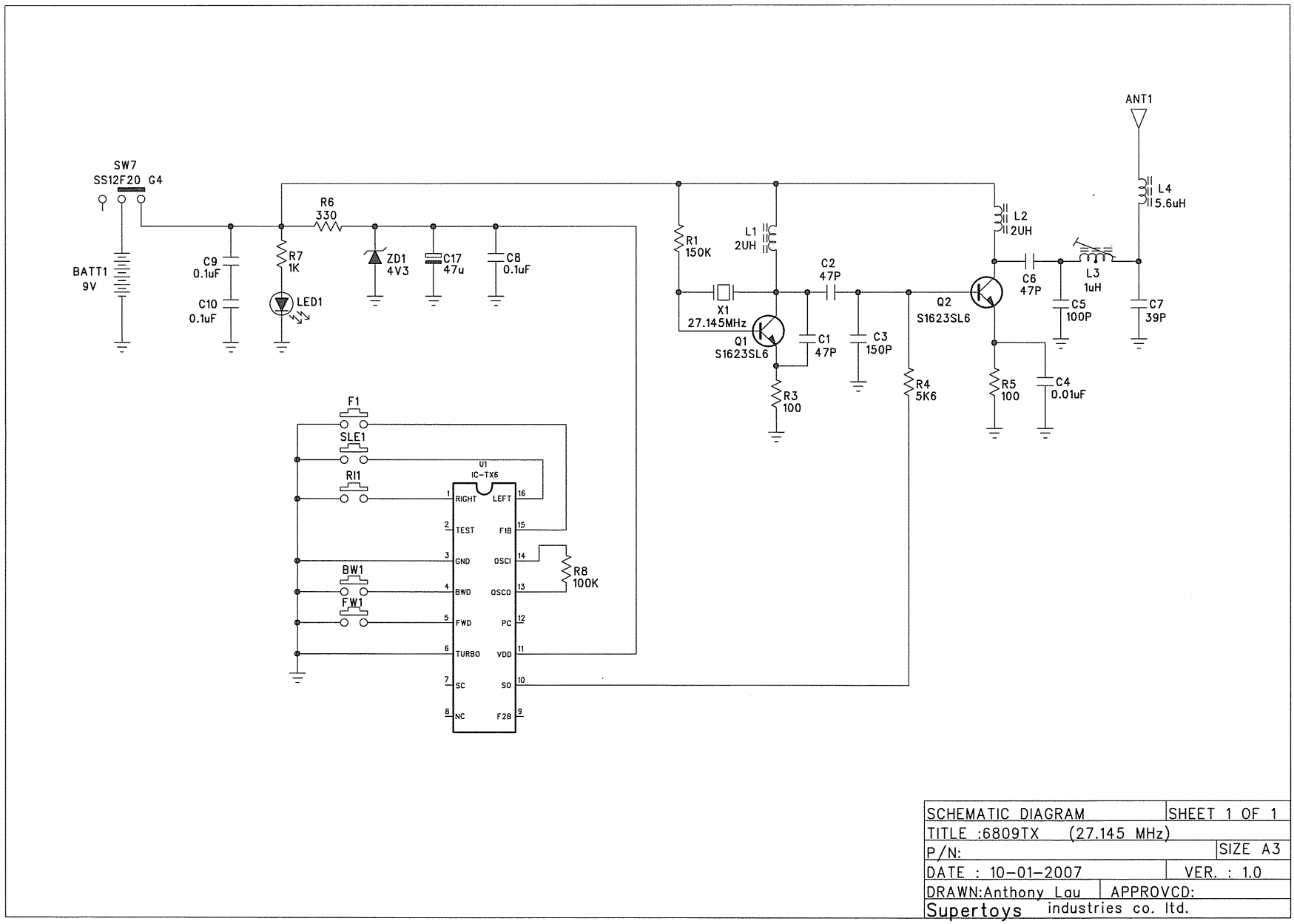

SCHEMATIC DIAGRAM	SHEET 1 OF 1
TITLE :6809TX (27.145 MHz)	
P/N:	SIZE A3
DATE : 10-01-2007	VER. : 1.0
DRAWN:Anthony Lau	APPROVCD:
Supertoys industries co. ltd.	