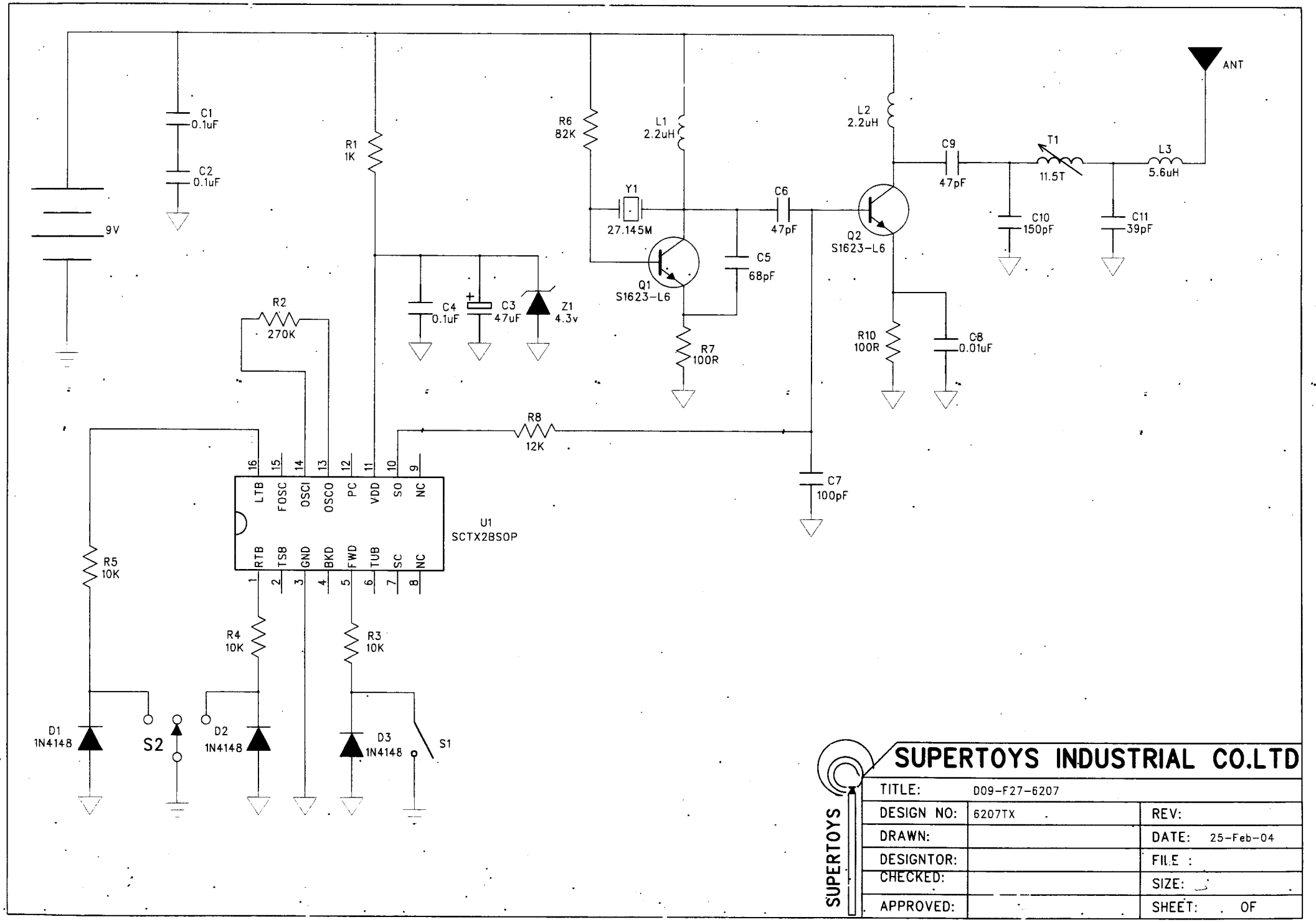

SUPERTOYS INDUSTRIAL CO.LTD

SUPERTOYS

TITLE:	D09-F27-6207		
DESIGN NO:	6207TX	REV:	
DRAWN:		DATE:	25-Feb-04
DESIGNTOR:		FILE :	
CHECKED:		SIZE:	
APPROVED:		SHEET:	OF